ZONING BOARD OF APPEALS
MEETING AGENDA
Thursday, March 19, 2015
7:00 p.m. ~ City Hall, Council Chambers, 323 W. Michigan Ave., Marshall, MI

CALL TO ORDER

ROLL CALL

CONSIDERATION OF MINUTES

Meeting minutes from November 20, 2014

APPROVAL OF AGENDA

PUBLIC COMMENTS FOR ITEMS ON THE AGENDA

There will be citizen comment time during each variance case being heard.

Citizens who wish to speak on *other matters on the agenda* may do so when called upon by the Chairman. Those people addressing the Board are required to give their name and address for the record and shall be limited to speaking for a maximum of five (5) minutes on a given matter.

NEW BUSINESS

APPEAL #15.01
Dimensional Variance filed by Chicago Diversified Foods (Taco Bell), 15955 W Michigan Avenue, from:

- **(a)** §156.324 MINIMUM NUMBER OF SPACES REQUIRED – increase allowed parking by 5 spaces
- **(b)** §156.323 GENERAL REGULATIONS – lessen parking lot setbacks
- **(c)** §156.328 LOADING SPACE REQUIREMENTS, §156.323 GENERAL REGULATIONS – lessen loading space requirements
- **(d)** §156.304 METHODS OF SCREENING, §156.306 INTERIOR LANDSCAPING, §156.307 PARKING LOT LANDSCAPING – minimize landscaping requirements

OLD BUSINESS

None

PUBLIC COMMENTS FOR ITEMS NOT ON THE AGENDA
Citizens who wish to address the Board on items *not on the agenda* may do so at this time. When called upon by the Chairman, please state your name and address for the record. Members of the public shall be limited to speaking for a maximum of five (5) minutes.

REPORTS
Planning Commission: Current minutes can be found online at **www.cityofmarshall.com**
City Council Liaison
Board Members
Staff Reports
Reminders

ADJOURN

FROM THE ZBA RULES OF PROCEDURE:

6.4 PUBLIC PARTICIPATION

Members of the public, both residents of the City of Marshall and others, are invited to address the Board during two portions of the regular ZBA agenda. Prior to the Board's discussion of regular agenda items, members of the public are invited to provide comment of items on the agenda. Comments unrelated to items on the agenda will be welcomed during a second "public comment" time noted later on the agenda. The Chair will first recognize any member of the public wishing to address the Board. Individuals will speak from the podium or a hand held microphone, state their name and address and limit their comments to a total of five (5) minutes during each of these "public comment" times. Members of the public will not routinely be involved in the Board's discussion or deliberation upon agenda items unless called upon by the Chair.

(unofficial)

MINUTES
MARSHALL CITY ZONING BOARD OF APPEALS
Regular Meeting Thursday, November 20, 2014
7:00 P.M. – COUNCIL CHAMBERS

CALL TO ORDER

This meeting was called to order by Chair Feneley at 7:04 p.m.

ROLL CALL

Members Present: Board Member Byrne, Karns, DeGraw, and Feneley

Members Absent: Board Members Beach and Galloway

Staff Present: Natalie Dean, Director of Community Services

APPROVAL OF MINUTES

Motion by DeGraw, supported by Byrne, to accept the minutes of the October 16, 2014 regular meeting as submitted. On a voice vote; **Motion Carried**.

APPROVAL OF AGENDA

Motion by Karns, supported by Byrne, to approve agenda of the November 20, 2014 regular meeting as submitted. On a voice vote; **Motion Carried**.

AUDIENCE PARTICIPATION

No public comment.

NEW BUSINESS

Appeal #14.08

Staff stated the petitioner, Goodwill Industries, is working towards a final site plan with Planning Commission. They have residential neighbors to the north and the west. The front of the business will be retail while the back will be a workforce training center. The maximum number of parking spaces allowed is 72. They have requested a variance for an additional 20 spaces.

Matt VanDyke, petitioner's attorney with Miller Canfield, clarified that the property is still currently owned by Monarch Bank. Goodwill's intentions are to purchase the property and develop the site with retail and training areas. There will still be a lot of open green space to the north as they are not developing the low-lying areas of the parcel. He stated that he understands that the purpose of the parking limitation is the best way to avoid line to line asphalt, but with this being a larger lot, it would not have that issue.

Mark Peters, Goodwill Industries, stated that he has done business analysis for comparable locations. October is generally their busiest month of the year. At the comparable store, October 2013 had 19,666 customers. During that month, there would be approximately 17 staff. He estimated they would need 65 parking spaces solely for customer parking, 2-3 for work force staff, and 12 for clients in the work force training area.

Board members asked for clarification on whether the old Goodwill store will be closing if this one opens, as well as if this project will utilize any of the existing structure currently on the property. Peters responded that the current store will be closed, and this site will be started from the ground up. None of the existing structure will be repurposed. It will be a 3-4 million dollar investment for the new 16,000 sqft facility. This area showed more need for the service side of the building, due to transport challenges to Battle Creek.

Motion by DeGraw, supported by Karns, to approve Appeal #14.08 for a Dimensional Variance from §156.324 MINIMUM NUMBER OF SPACES REQUIRED, filed by Goodwill Industries, 842 W Michigan Ave, in the B-4 district, to exceed maximum number of parking spaces from 72 to 92 for a new retail/office development.

Using the Dimensional Variance Worksheet, the board cited the following items pertaining to this variance:

- Strict Compliance with the specified dimensional standard(s) will deprive the applicant of rights commonly enjoyed by other property owners in the same zoning district, create an unnecessary burden on the applicant, or unreasonably prevent the owner from using the property for a permitted purpose. ***Board Members discussed that the use is a permitted use, and that use is in need of more parking spaces. Petitioner presented ample research to justify the need for 92 spaces.***

- The variance will do substantial justice to the applicant, as well as to other property owners, and a lesser variance than requested will not give substantial relief to the applicant or be consistent with justice to other property owners. ***Board Members discussed that neighbors would be done justice with a newly developed neighboring lot. Adding the additional parking would deter traffic from the residential areas.***

- The need for the variance is due to unique circumstances peculiar to the land or structures involved that are not applicable to other land or structures in the same district. ***Board Members discuss that the wet area to the north of the lot presents a unique challenge that most owners do not encounter.***

- The problem and resulting need for the variance has not been self-created by the applicant or the applicant's predecessors. ***Board Members discussed that the need for the additional spaces is driven by the proposed multi-use of the building.***

- The variance will not cause significant adverse impacts to adjacent properties, the neighborhood or the City and will not create a public nuisance or materially impair public health, safety, comfort, morals, or welfare. ***Board Members discussed that safety would be adversely impacted if the variance was denied due to possible dangerous traffic patterns and business traffic in residential area if there were a lack of parking.***

- The alleged hardship and practical difficulties that will result from a failure to grant the variance include substantially more than mere inconvenience, or an inability to attain a higher financial return. ***Board Members discussed that additional parking spaces would not have an effect on revenue as it is needed due to the multiple uses of the building.***

On a roll-call vote-ayes: Byrne, DeGraw, Feneley, and Karns; nays-None. **Motion Carried.**

OLD BUSINESS

None

PUBLIC COMMENT

None

REPORTS

Staff reported that the Community Open House went well and reminded all board members and public to take the online survey for feedback on what they would like to see in the updated Master Plan.

ADJOURN

Meeting adjourned at 7:35 pm.

Respectfully submitted,

Lisa Huepenbecker

CASE #15.01
STAFF REPORT

Location: 15955 W Michigan Ave
Property Zoning: B-4 Regional Commercial
Owner: Chicago Diversified "Taco Bell"
Setback Distances §156.181 : 20 Front, 10/15 Sides, 25 Rear

VARIANCE HISTORY

In 1992, Case#92-3 for a dimensional variance was approved for relief from setbacks for new construction in regard to the south right of way on W. Michigan Ave. The variance allowed construction at 37' from the street right of way rather than the required 60'.

BACKGROUND

This case was noticed in accordance with the Michigan Zoning Enabling Act of 2006, section 125.3103: *Notice; publication; mail or personal delivery; requirements.* The newspaper published the notice on February 27, 2015; City Hall posted the notice on February 24, 2015; and notices were sent to all property owners within 300 feet also on February 24, 2015.

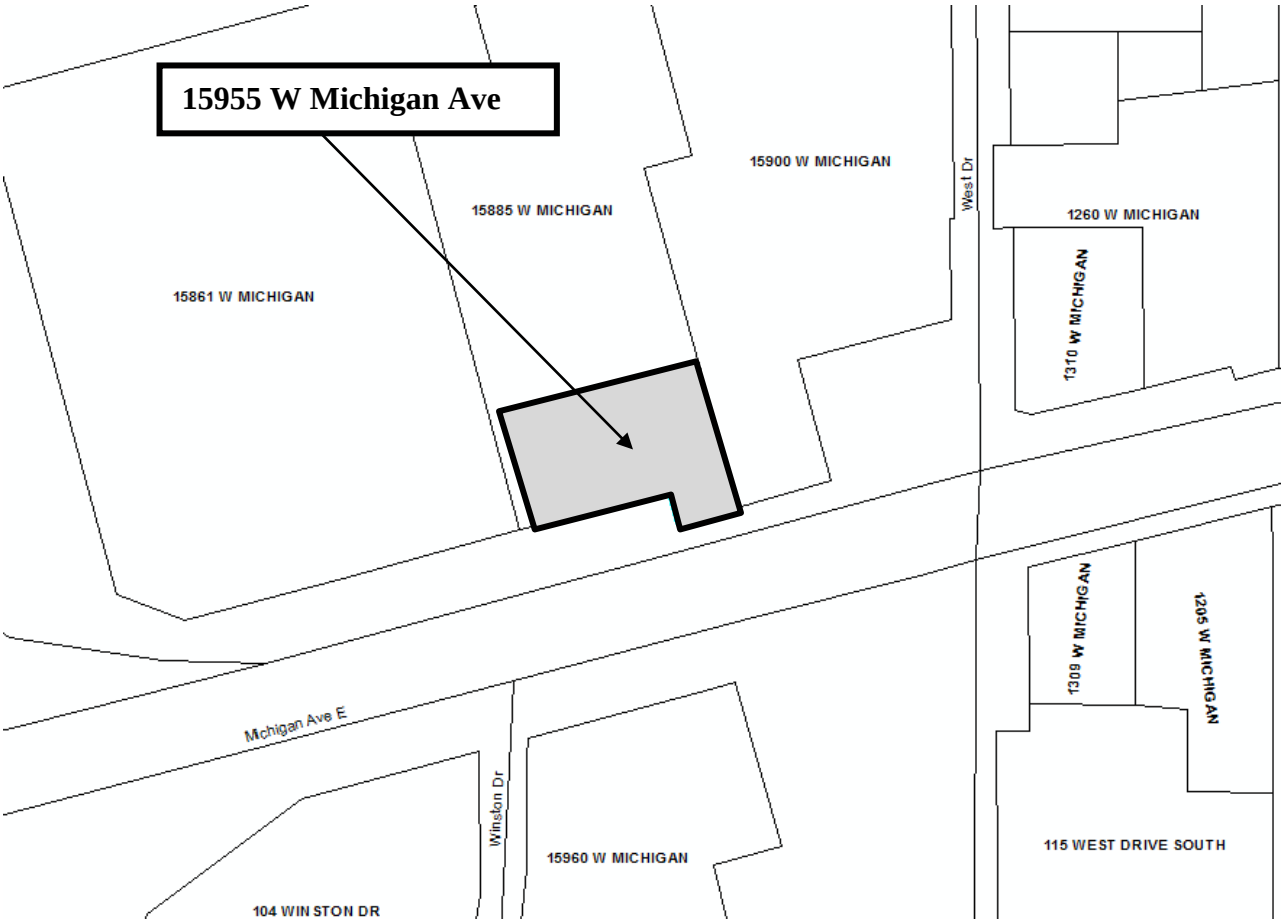

Taco Bell plans to completely demolish the existing structure at 15955 W Michigan Ave and re-build using the company's prototype design. During the Staff review meeting of the site in which the applicant was present, it was noted that multiple aspects of the site would require a variance from the ordinance in order to be allowed. Those discussed included parking space limits, loading space placement, and landscaping requirements. They approached the Planning Commission for their first site plan review on March 11, 2015, and it was suggested to seek the multiple variances needed separately from the site plan review.

The ordinances the applicant is seeking relief from are:

(A) INCREASE IN PARKING SPACES

§ 156.324 MINIMUM NUMBER OF SPACES REQUIRED

(B) *Maximum number of spaces permitted.* To minimize excessive areas of pavement that contribute to higher rates of stormwater runoff, exceeding the minimum parking space requirements of this section by more than 20% shall be prohibited.

For this particular development, 25 spaces would be allowed, with a 20% increase, making the total allowable spaces 30 spaces. **They are requesting an increase of 5 spaces for a total of 35 parking spaces.**

(B) PARKING LOT SETBACKS

§ 156.323 GENERAL REGULATIONS

(I) *Setbacks*. No part of any off-street parking area shall be closer than ten feet to any street right-of-way line or the lot boundary of any residential, school, hospital, or other institutional use.

The applicant has proposed a 2' setback to the west, 2' to the east, and 0' at the north boundary. While the boundaries in question to do not abut a street right of way or any of the uses listed in the ordinance in order to enforce this requirement, the purpose of this requirement contributes to the ability to meet multiple other ordinances including barrier, landscaping, and screening obligations. Landscaping and screening requirements are addressed in the same variance application, but barrier requirements for the district are not and should be kept in mind.

B-4 REGIONAL COMMERCIAL DISTRICT
§ 156.133 DEVELOPMENT REQUIREMENTS.

To ensure compatibility with the intent and purpose of the B-4 (Regional Commercial) District, all uses and principal and accessory buildings and structures in the district shall be subject to the following development requirements:

(A) Barriers. All development in the B-4 District shall be physically separated from the feeder road by a curb and planting strip or other suitable barrier designed to limit vehicle ingress and egress to planned access points.

(C) LOADING SPACE

§ 156.328 LOADING SPACE REQUIREMENTS.

(C) Loading spaces shall not be provided in the front yard, the front side of any building, or on any side facing and directly visible to a public street, unless the Planning Commission determines such a location is necessary due to the building's location or placement or existing street patterns.

§ 156.323 GENERAL REGULATIONS

(J) *Loading spaces.* Loading spaces shall not be construed as supplying off-street parking space.

The loading space is currently placed in a front yard, as well as overlapping with drive-thru stacking spaces.

(D) LANDSCAPING

§ 156.304 METHODS OF SCREENING.

One or more of the following screening options shall be required on land abutting city street rights-of-way, and where otherwise required by this chapter for screening purposes. The Planning Commission may also require one or more of the following screening methods to be used to screen or separate unlike land uses or to otherwise meet the intent of this subchapter or chapter:

(B) *Hedgerow*. Where headlights from parked vehicles will shine into the roadway, the Planning Commission may require use of a totally obscuring hedge with a minimum height of 24 inches and a maximum height of 36 inches.

(E) *Evergreen screen or buffer strip.* A buffer strip may be required where a use abuts residential or other less intensive uses. The intent of the buffer strip is to have a minimum five foot high obscuring area alongside or rear lot lines, and an appropriate landscaped strip along front lot lines. A buffer strip shall meet the following requirements:

(1) Minimum width of ten feet.

(5) Street trees. On every site involving new development or redevelopment, deciduous street trees shall be provided along the fringe of the street right-of-way in conformance with § 99.06 of this code of ordinances.

§ 156.306 INTERIOR LANDSCAPING.

For every new development, except single-family detached dwellings and any use in the MHPD (Manufactured Housing Park) District or B-3 (Neighborhood Commercial) District, interior landscaping areas exclusive of any other required landscaping shall be provided, consisting of at least 5% of the total lot area. This landscaped area should be grouped near building entrances, along building foundations, along pedestrian walkways, and along service areas. All interior landscaping shall conform to the following:

(C) The interior landscaping area shall contain grass or other suitable living groundcover.

§ 156.307 PARKING LOT LANDSCAPING.

The following standards shall apply to all proposed parking lots with ten or more parking spaces, any existing parking lot containing ten or more parking spaces that is proposed to be expanded, and any existing parking lot on an existing site subject to Planning Commission review of a site plan per §§ 156.380*et seq.*:

(A) *Perimeter screening.* Off-street parking areas shall be effectively screened on any side that adjoins or faces a residential district, existing residential use or street right-of-way, per § 156.304.

(B) *Landscaping within parking lots.* Landscaping shall be provided and maintained within off-street parking lots, as follows:

(1) At least one deciduous tree and one ornamental tree with at least 100 square feet of planting area shall be provided for each ten parking spaces, in addition to any other landscaping requirements.

While there is landscaping proposed for the site, the applicant does not meet landscaping requirements as set forth in the zoning ordinance. Items specifically not in conformance are parking lot screening from adjacent properties, lack of living groundcover, and the amount of landscaping in regards to the lot and parking area.

CASE ANALYSIS

Dimensional Variances are outlined in §156.406 (A) and state that the overwhelming reason for the variance should be a finding of unnecessary hardship, as stated below:

(1) Strict compliance with the specified dimensional standard(s) will deprive the applicant of rights commonly enjoyed by other property owners in the same zoning district, create an unnecessary burden on the applicant, or unreasonably prevent the owner from using the property for a permitted purpose.

Staff Comment: (A) The need for an increase in parking spaces has not been substantiated by the applicant other than stating that the prototype building is specifically designed to have 35 parking spaces. **(B)** Parking lot setback requirements will decrease the buildable area on an already small parcel, but the lack of setbacks will increase the need for screening and other landscaping variances. **(C)** With 3 of the 4 boundaries being classified as a front yard and the last being a side yard, it is impossible to build a structure that requires any loading space without a variance in conformance with the ordinance. **(D)** Without perimeter screening of the parking area, headlights will be directed onto neighboring properties and into roadways which could create visibility issues. Interior and parking lot landscaping requirement could possibly be met by replacing evergreens with required deciduous and ornamental, replace excessive shrubs with the required trees, and replacing proposed river rock with grass or other living groundcover.

(2) The variance will do substantial justice to the applicant, as well as to other property owners, and a lesser variance than requested will not give substantial relief to the applicant or be consistent with justice to other property owners.

Staff Comment: Approval of requested variances will eliminate redevelopment requirements for this challenging property, but lesser variances should be considered for screening and landscaping requirements in order to protect neighboring properties' interests. Increasing the parking allowance by 5 spaces and allowing front yard loading area may create a hardship by completely denying the ability to improve the site.

(3) The need for the variance is due to unique circumstances peculiar to the land or structures involved that are not applicable to other land or structures in the same district.

Staff Comment: While most sites have a front yard, 2 side yards, and a rear, this site has three boundaries classified at front yards. Front yards carry much heavier restrictions in the ordinance compared to rear or even side yards. No matter which zoning district, three front yards create a unique and challenging situation. This lot is also very small in comparison to parcels with similar zoning. The average lot site in the B-4 district is 1.14 acres, while this lot is only 0.7 acres. The limitation of space creates a challenge to meet ordinance requirements that other B-4 properties can easily adhere.

(4) The problem and resulting need for the variance has not been self-created by the applicant or the applicant's predecessors.

Staff Comment: While the site has always been compact with a challenging location, allowing additional parking spaces and lack of required setbacks increases the challenge of meeting buffering and landscaping requirements.

(5) The variance will not cause significant adverse impacts to adjacent properties, the neighborhood or the city, and will not create a public nuisance or materially impair public health, safety, comfort, morals or welfare.

Staff Comment: While the variances for landscaping, the loading area, and setbacks are not likely to create nuisances or have adverse impacts on adjacent properties, the lack of screening between the off-street parking and roadways could create a hazard.

(6) The alleged hardship and practical difficulties that will result from a failure to grant the variance include substantially more than mere inconvenience, or an inability to attain a higher financial return.

Staff Comment: Without some degree of a variance, this redevelopment is not likely to proceed. While the redevelopment of this site will improve aesthetics and traffic flow, they cannot be seen as the only rational for granting variances. Redevelopment may create a higher financial return for the occupant by attracting customers, but it does not appear to be the focus of the improvement.

Zoning Board of Appeals
Variance Application

32.3 West Michigan~ Marshall, MI ~ 49068
Residential $50.00 Commercial $100.00

CITY OF Marshall Michigan

Petitioner Name CHICAGO DIV. FOODS - TACO BELL

Address 400 E 22ND ST. LOMBARD IL Phone 630-889-1818

Property address for which you are seeking a variance: 15955 W MICHIGAN AVE

Are you the owner? Yes No (If not, please attach owners contact information)

Current Zoning B-4 Current Use DRIVE THROUGH TACO BELL

Zoning of abutting parcels B-4

X Plot Plan Attached
According to ordinance, you must include a plot plan of the site, drawn to scale, with a north-arrow, all lot lines shown, street right of ways, any easements, any structures, setback dimensions, any parking areas, driveways, sidewalks, and any other site improvements.

X Dimensional Variance or _____ Use Variance

_____ Reasons for variance attached
Please see back of sheet for appropriate ZBA criteria.

X Non-refundable Fees Paid

---

*The ZBA meets on the 3RD Thursday of each month.

Application must be received by the date listed on the hack of this sheet to be heard on the next scheduled meeting.

I understand that I am expected to attend the ZBA Public Hearing pertaining to this matter. If I am unable to attend, I will send a representative in my place. I understand that the application fee is non-refundable and does not apply to any future permits. Furthermore, if the variance is granted, I agree to obtain a permit before commencing work.

Signature of Petitioner _____ Date 2/14/15

Signature of Owner _____ Date 2/9/15

Questions concerning these requirements should be directed to Natalie Dean, Director of Community Services, at: (269) 781-3985 x 1505

Feb. 16 2015

City of Marshall
Attn: Natalie Dean, Director of Community Services
City of Marshall--Public Service Building
900 S. Marshall, Marshall, MI

Re: Zoning appeals application, Dimensional Variance request for parking, parking setback and loading Area

While these criteria are specifically written for parking space requirements, the same arguments 1-6 could be made for parking setback variance and loading variance, due to the unique location and restrictions required for this site. You would not be able to build any sort of viable business if you apply the parking setback to this site. (see attached) and due to the fact that there is no rear yard and 3 front yards the loading area can't go in the rear yard. (see site plan setbacks)

1. This existing property is used as an existing Taco Bell which is a drive through facility and a sit down restaurant. The new proposed new proto-type Taco Bell has corporate standards for minimum parking of new structures such as the proposed. Strict compliance with the required parking spaces per the zoning ordinance reduces the amount of existing parking spaces by 5 and will not meet the required standards of Corporate Taco Bell for this type of new proto-type building. The existing building has 35 spaces and the new building requirements are 35 spaces minimum. This will deprive the applicant's rights of building a new more efficient building by requiring a lesser number of parking spaces for this site. As I understand the Marshall Zoning ordinance a sit down restaurant of this many seats would be able to have 35 parking spaces but when you add the drive through it limits the amount of spaces to a lesser number. This type of requirement for limiting the amount of parking spaces for a drive through facility creates an unnecessary burden and prevents the applicant from using the property for what is an existing use to upgrade the facility to a new proto-type building and create a better traffic flow to the existing site.

2. The proposed parking space variance will do substantial justice for the applicant to keep a drive through facility similar to the existing building on site. A lessor variance will not allow the owner to provide the community with a new proto-type building with a better traffic flow. This will encourage other such similar sites and be consistent with the opportunities with justice to other property owners.

3. Taco Bell's new unique proto-type building has 54 seats along with a drive through for this type of small site. In order to keep the Taco Bell corporate standard for this site a variance in needed due to the unique circumstances of such an existing small site. It has what is to be considered 3 front yards no rear yard, it abuts both city and M.D.O.T. right of ways, the grade is extreme in certain areas of the site and the existing accepted parking spaces are now considered non-conforming. Due to these unique circumstances peculiar to this site these variances are not applicable to other land or structures in the same district.

4. This site is an existing small site that only a Taco Bell drive through such as the proposed or existing can be utilized for this use for this site. All the zoning requirement restrictions placed on this site have made this site almost unbuildable without variances. The zoning requirements have been approved after this site was established and the problem of non-conforming is the result of the zoning requirements that have been implemented to this existing site.

5. The proposed variances are just re-establishing the right of the property owner to the original use of what is existing and will have no effect on the city.

6. The hardship and practical difficulties of not granting this variance will lessen the effectiveness of traffic flow, and limit owner's right to upgrade with new designs and better operations for an existing use.

Thank You.

JVB LLC
James Vanden Berge
Owner

Fire Protection Notes

1. **Shop dwg's & cut sheets for the hood fire suppression system & alarm system must be submitted for review and approval to the Allegan Charter Twp. Fire Dept.**
2. **A fire dept. lock box must be installed on the Bldg.**
3. **Keys for all exterior & interior doors must be given to the fire inspector at the final inspection to be locked inside the fire dept. lock box.**
4. **Verify location and type of Fire extinguisher with Fire Inspector**

PROPOSED NEW BUILDING FOR:

TACO BELL #5047

CHICAGO DIVERSIFIED FOODS CORP.
400 E. 22ND STREET SUITE E
LOMBARD, IL 60148
ATTN. MIKE BASILE
WORK:630.889.1818
CELL:616.437.2908

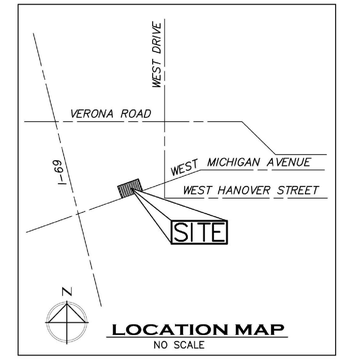

GENERAL NOTES

1. Utility locations are derived from actual measurements or available records. They should not be interpreted to be exact locations nor should it be assumed that they are the only utilities in this area.

2. NOTE TO CONTRACTORS: 3 (THREE) WORKING DAYS BEFORE YOU DIG, CALL MISS DIG AT TOLL FREE 1-800-482-7171 FOR UTILITY LOCATIONS ON THE GROUND.

3. Easement, boundary lines, and boundary description shown hereon were taken from previous Nederveld project number 06100003, dated January 4, 2006; easements and parcel boundary lines were not reviewed at the time of this survey.

SITE BENCHMARKS

BENCHMARK #578 ELEVATION ---------- 918.56 (NAVD88)
Set "square" benchmark in NNW side of concrete light pole base 3'± above grade at the Southwest corner of parking lot of Monarch Community Bank on the West line of the asphalt extended South 2'±.

BENCHMARK #675 ELEVATION ---------- 916.18 (NAVD88)
Set benchmark on the SW flange bolt above the "W" in "WATEROUS" 1.5'± above grade at the SE corner of the K-Mart parking lot 62'± W of the back of curb for Taco Bell parking lot & 22' N of right-of-way fence.

BENCHMARK #822 ELEVATION ---------- 924.43 (NAVD88)
Benchmark from NGS Datasheet designation L335; 12.6 miles Westerly along Austin and Michigan Avenues from 0.35 miles North of the Post Office in Albion. 8.3'± East of the centerline I-69 Northbound Lanes & 19.4' South of the center of Michigan Avenue. (OFF-SITE)

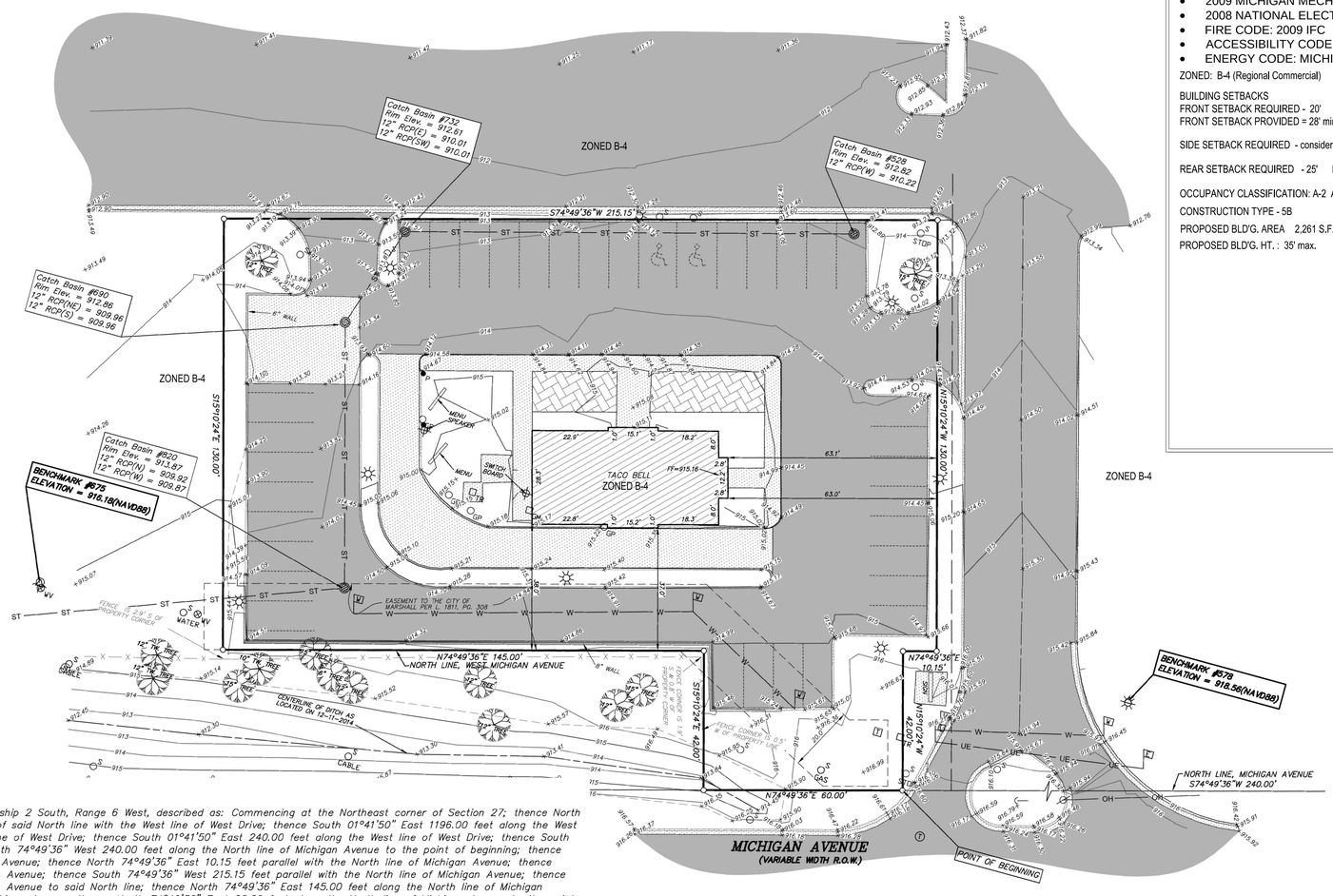

BUILDING DATA

2009 INTERNATIONAL BUILDING CODE – PLUS H.P. AMENDMENTS
MICHIGAN BUILDING CODE - AMENDMENTS, 2009

- 2009 MICHIGAN BUILDING CODE
- 2009 MICHIGAN PLUMBING CODE
- 2009 MICHIGAN MECHANICAL CODE
- 2008 NATIONAL ELECTRICAL CODE
- FIRE CODE: 2009 IFC
- ACCESSIBILITY CODE: 2009 MBC & 2003 ANSI 117.1
- ENERGY CODE: MICHIGAN UNIFORM ENERGY CODE

ZONED: B-4 (Regional Commercial)

BUILDING SETBACKS
FRONT SETBACK REQUIRED - 20'
FRONT SETBACK PROVIDED = 28' min.

SIDE SETBACK REQUIRED - considered Front setback per lot design see above

REAR SETBACK REQUIRED - 25' REAR SETBACK PROVIDED = 79'

OCCUPANCY CLASSIFICATION: A-2 Assembly

CONSTRUCTION TYPE - 5B

PROPOSED BLD'G. AREA 2,261 S.F.

PROPOSED BLD'G. HT. : 35' max.

DESCRIPTION

DESCRIPTION: A parcel of land in the Northeast Quarter of Section 27, Township 2 South, Range 6 West, described as: Commencing at the Northeast corner of Section 27; thence North 89°40'25" West 70.04 feet along the North Section line to the intersection of said North line with the West line of West Drive; thence South 01°41'50" East 1196.00 feet along the West line of West Drive; thence South 88°18'10" West 5.00 feet along the West line of West Drive; thence South 01°41'50" East 240.00 feet along the West line of West Drive; thence South 46°02'00" West 71.98 feet to the North line of Michigan Avenue; thence South 74°49'36" West 240.00 feet along the North line of Michigan Avenue to the point of beginning; thence North 15°10'24" West 42.00 feet perpendicular to the North line of Michigan Avenue; thence North 74°49'36" East 10.15 feet parallel with the North line of Michigan Avenue; thence North 15°10'24" West 130.00 feet perpendicular to the North line of Michigan Avenue; thence South 74°49'36" West 215.15 feet parallel with the North line of Michigan Avenue; thence South 15°10'24" East 130.00 feet perpendicular to the North line of Michigan Avenue to said North line; thence North 74°49'36" East 145.00 feet along the North line of Michigan Avenue; thence South 15°10'24" East 42.00 feet along the North line of Michigan Avenue; thence North 74°49'36" East 60.00 feet along the North line of Michigan Avenue to the point of beginning.

Together with a non-exclusive easement for ingress, egress and utilities as created, limited and defined in instruments recorded in Liber 1227, page 976, Liber 1549, page 365 and Liber 1559, page 897.

(From First American Title Insurance Company Commitment Number 129987, dated December 27, 2005)

1 / T100 EXISTING SITE PLAN
SCALE: 1" = 30'-0"

TITLE/SITE
T100 SITE LOCATION MAP, SHEET INDEX, BUILDING DATA, EXIST. SITE PLAN, EXIST. ZONING PLAN

CIVIL
D1.0 DEMOLITION SITE PLAN
C1.0 SITE PLAN
C2.0 UTILITY SITE PLAN
C102 SITE DETAILS
C103 SITE DETAILS
C104 SITE DETAILS
L100 LANDSCAPE SITE PLAN
PH1.0 SITE PHOTOMETRIC PLAN

ARCHITECTURAL
A1.0 FLOOR PLAN
A2.0 EQUIPMENT AND SEATING PLAN
A4.0 EXTERIOR ELEVATIONS

811 Know what's below. Call before you dig.

UTILITY LOCATIONS ARE DERIVED FROM ACTUAL MEASUREMENTS OR AVAILABLE RECORDS. THEY SHOULD NOT BE INTERPRETED TO BE EXACT LOCATIONS NOR SHOULD IT BE ASSUMED THAT THEY ARE THE ONLY UTILITIES IN THIS AREA.

RDC
RETAIL DESIGN CONSULTANTS
7580 48TH ST. SE.
GRAND RAPIDS MI 49512
T.616.634.2253
GLENN@RDC-LLC.COM

JVB LLC
JAMES VANDEN BERGE
CIVIL & ARCHITECTURAL CONSULTATION & DESIGN SERVICES
2065 FOXRIDGE
GRAND RAPIDS, MI 49505
PHONE: 616-443-2524
EMAIL : JVBCIVILARCH@COMCAST.NET

TACO BELL

TACO BELL #5047
CHICAGO DIVERSIFIED FOODS CORP.
15955 W MICHIGAN AVE
CITY OF MARSHALL, CALHOUN COUNTY, MICHIGAN

PRELIM. 1/19/15

This drawing is the sole property of JVB LLC and is a copyrighted document and is not to be used or reproduced without their written consent. © © Unpublished work 2008

STATE OF MICHIGAN
GLENN RICHARD RAHN
ARCHITECT
No. 57678
LICENSED ARCHITECT
SEAL

DRAWN BY	JVB
CHECKED BY	JVB
PROJECT NUMBER	014028

T100

1 / A4.0 SOUTH EXTERIOR ELEVATION

SCALE: 1/4" = 1'-0"

2 / A4.0 NORTH EXTERIOR ELEVATION

SCALE: 1/4" = 1'-0"

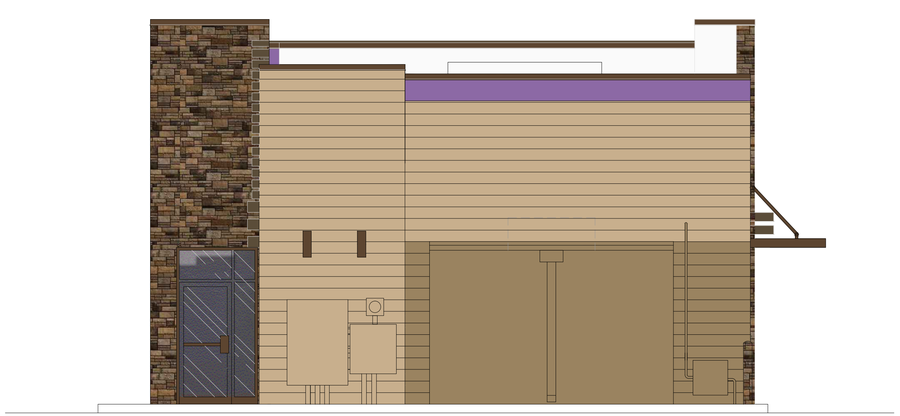

4 / A4.0 WEST EXTERIOR ELEVATION

SCALE: 1/4" = 1'-0"

3 / A4.0 EAST EXTERIOR ELEVATION

SCALE: 1/4" = 1'-0"

RETAIL DESIGN CONSULTANTS
7580 48TH ST. SE.
GRAND RAPIDS MI 49512
T.616.634.2253
GLENN@RDC-LLC.COM

JAMES VANDEN BERGE
CIVIL & ARCHITECTURAL
CONSULTATION & DESIGN
SERVICES
2065 FOXRIDGE
GRAND RAPIDS, MI 49505
PHONE: 616-443-2524
JVB LLC
EMAIL : JVBCIVILARCH@COMCAST.NET

TACO BELL

TACO BELL #5047
CHICAGO DIVERSIFIED FOODS CORP.
15955 W MICHIGAN AVE
CITY OF MARSHALL, CALHOUN COUNTY, MICHIGAN

PRELIM. 1/19/15

This drawing is the sole property of JVB LLC and is a copyrighted document and is not to be used or reproduced without their written consent. © Unpublished work 2008

SEAL

DRAWN BY	JVB
CHECKED BY	JVB
PROJECT NUMBER	014028

A4.1

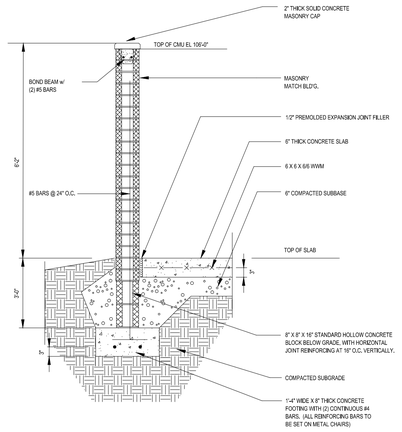

GENERAL NOTES:

1. THE CONTRACTOR SHALL TAKE ALL NECESSARY FIELD MEASUREMENTS AND VERIFY ALL DIMENSIONS SHOWN ON THE DRAWINGS, INCLUDING THE CONTRACTORS, SUBCONTRACTORS, AND MANUFACTURERS SHOP DRAWINGS. SHOULD ANY ERROR OR INCONSISTENCY EXIST, THE CONTRACTOR SHALL NOT PROCEED WITH THE WORK AFFECTED THEREBY UNTIL CORRECTIONS HAVE BEEN MADE.
2. CONSTRUCTION SHALL COMPLY WITH ALL CODES, STANDARD BUILDING PRACTICES AND REGULATIONS OF GOVERNING AUTHORITIES CONTRACTOR SHALL NOTIFY MISS DIG PRIOR TO THE START OF CONSTRUCTION.
3. DRAWINGS: ALL CONTRACTORS SHALL REVIEW ALL DRAWINGS AND SPECIFICATIONS IF INCLUDED. CONTRACTORS ARE RESPONSIBLE FOR COMPLETE REVIEW. ITEMS AFFECTING ALL TRADES ARE PLACED THROUGHOUT THE SET OF DRAWINGS. NO "EXTRAS" FOR MISSED ITEMS IN OTHER SECTIONS WILL BE PERMITTED. THE CONTRACTOR SHALL PROMPTLY NOTIFY THE ARCHITECT OF ANY AMBIGUITY, INCONSISTENCY OR ERROR WHICH THEY DISCOVER UPON EXAMINATION OF THE CONTRACT DOCUMENTS, THE SITE, OR LOCAL CONDITIONS. THE OWNER SHALL DISTRIBUTE COMPLETE SETS OF DRAWINGS TO ALL SUBCONTRACTORS. DO NOT SEPARATE DRAWINGS BY DISCIPLINE. DO NOT SCALE DRAWINGS.
4. COMPLETENESS: ANY MATERIAL OR LABOR, NEITHER SHOWN ON THE DRAWINGS, NOR SPECIFIED, BUT WHICH IS OBVIOUSLY NECESSARY TO COMPLETE THE WORK OF A SIMILAR NATURE OR TO COMPLY WITH ALL APPLICABLE CODES SHALL BE FURNISHED WITHOUT ADDITIONAL COST TO THE OWNER OR THE ARCHITECT. IN THE CASE OF CONFLICTING QUANITITES / VALUES, THE GREATER AMOUNT OR THE ONE OF GREATER VALUE SHALL PREVAIL AND BE PROVIDED BE THE CONTRACTOR AS PART OF HIS BASE CONTRACT AND SHALL NOT BECOME A BASIS FOR CHANGE ORDERS OR CLAIMS FOR ADDITIONAL COMPENSATION. IN THE CASE OF CONFLICTING OR INCONSISTENT INFORMATION, THE MOST STRINGENT REQUIREMENTS SHALL PREVAIL AND BE PROVIDED BY THE CONTRACTOR AS PART OF HIS BASE CONTRACT AND SHALL NOT BECOME A BASIS FOR CHANGE ORDERS OR CLAIMS FOR ADDITIONAL COMPENSATION.
5. PERMITS: EACH CONTRACTOR SHALL BE RESPONSIBLE FOR ALL PERMITS, FEES, LABORS, EQUIPMENT, ETC. AS MAY BE REQUIRED TO COMPLETE THEIR RESPECTIVE WORK CATEGORY. CONTRACTORS SHALL FORWARD TO THE ARCHITECT A COPY OF ALL APPROVED PERMITS, DRAWINGS AND CODE COMPLIANCE ADDENDA WITH PLAN EXAMINERS COMMENTS WITHIN 48 HOURS OF RECEIPT OF THE SAME AT NO COST TO THE ARCHITECT. ANY ADDITIONAL WORK REQUIRED AS A RESULT OF THE ABOVE SHALL BE PROVIDED BY THE CONTRACTOR AS PART OF HIS BASE CONTRACT AND SHALL NOT BECOME A BASIS FOR CHANGE ORDERS OR CLAIMS FOR ADDITIONAL COMPENSATION IF THE CONTRACTOR FAILS TO COMPLY WITH PROVIDING THE APPROVED PLANS OR ADDENDA TO THE ARCHITECT.
6. DOCUMENTATION: THE CONTRACTOR SHALL KEEP A RECORD OF ALL DEVIATIONS FROM THE CONTRACT DOCUMENTS. THEY SHALL NEATLY AND CORRECTLY ENTER IN COLOR PENCIL, ANY DEVIATIONS ON THE DRAWINGS AND SPECIFICATIONS AFFECTED AND SHALL KEEP THE DRAWINGS AVAILABLE FOR INSPECTION. AN EXTRA SET OF CONSTRUCTION DOCUMENTS WILL BE FURNISHED FOR THE PURPOSE.
7. AT COMPLETION OF THE JOB AND BEFORE FINAL APPROVAL, THE CONTRACTOR WILL MAKE ANY FINAL CORRECTIONS TO DRAWINGS RELATED TO THEIR WORK CATEGORY AND SHALL CERTIFY TO THE ACCURACY OF EACH PRINT, THAT THE WORK IS COMPLETE ACCORDING TO ALL CONTRACT DOCUMENTS, AND THE CORRECTIONS TO THE DRAWINGS BY SIGNATURE THEREON AND DELIVER SAME TO THE ARCHITECT.
8. DRAWINGS INDICATE THE MINIMUM STANDARDS, SHOULD ANY WORK INDICATED BE SUBSTANDARD TO ANY ORDINANCE, LAWS, CODES, RULES OR REGULATIONS BEARING ON THE WORK, THE CONTRACTOR SHALL EXECUTE THE WORK IN ACCORDANCE WITH SUCH ORDINANCES, LAWS, CODES, RULES, OR REGULATIONS AS A PART OF HIS BASE CONTRACT WITHOUT INCREASE IN COST TO OWNER OR ARCHITECT.
9. FIELD MEASURE AND VERIFY OR REVISE DIMENSIONAL INFORMATION TO THE EXTENT REQUIRED TO EXECUTE THE WORK REQUIRED ON THE CONTRACT DOCUMENTS.
10. THE GENERAL CONTRACTOR IS TO VERIFY ALL EXISTING CONDITIONS PRIOR TO BEGINNING CONSTRUCTION. NOTIFY THE ARCHITECT/ ENGINEER IMMEDIATELY IF EXISTING CONDITIONS INVALIDATE THE DRWG.s OR WHEN QUESTIONS ARISE REGARDING THE INTENT OF THE DRAWINGS.
11. UNLESS INDICATED OTHERWISE, FLR. MAT'L CHANGES SHALL OCCUR BENEATH DOORS OR THRESHOLDS.
12. WHERE OPENINGS IN INTERIOR PARTITIONS OCCUR (INCLUDING DOORS AND WINDOWS), CONSTRUCTION ABOVE OPENINGS SHALL MATCH ADJ. CONSTRUCTION IN FINISH AND FIRE RATING.
13. GENERAL CONTRACTOR IS TO VERIFY LOCATION OF ALL EMERGENCY AND EXIT LIGHTS WITH THE BUILDING OFFICIAL PRIOR TO INSTALLATION.
14. MECHANICAL AND ELECTRICAL CONTRACTORS MUST COORDINATE WITH OTHER TRADES TO ASSURE COMPATIBILITY INCLUDING, BUT NOT LIMITED TO THE FOLLOWING:
    A. STRUCTURAL LOADING
    B. POWER REQUIREMENTS
    C. CLEARING FOR INSTALLATION & MAINTENANCE
15. MECHANICAL AND ELECTRICAL CONTRACTORS ARE FULLY RESPONSIBLE FOR THEIR OWN WORK IN TERMS OF BUT NOT LIMITED TO: ALL CODES, DIMENSIONS, COORDINATION WITH OTHER TRADES & ALL APPLICABLE MUNICIPAL AND OTHER GOVERNMENTAL APPROVALS.
16. MECHANICAL SCOPE: FURNISH AND INSTALL A COMPLETE AND OPERABLE SYSTEM BASED ON THE OWNERS CRITERIA INCLUDING, BUT NOT LIMITED TO THE FOLLOWING.
    A. HEATING AND COOLING REQUIREMENTS
    B. AIR HANDLING UNIT(S).
    C. FIRE PROTECTION SYSTEM(S)
    D. PLUMBING SYSTEM
    E. TEMPERATURE CONTROL SYSTEM
    F. SUPPLY DIFFUSERS, RETURN AIR GRILLS
    G. DUCTWORK, PIPING & INSULATION
    H. FIRE AND BALANCING DAMPERS
17. ELECTRICAL SCOPE: LIGHTING SYSTEM SHALL BE PROVIDED TO MAINTAIN LIGHT CONSISTENT WITH CURRENT IES STANDARDS. FURNISH AND INSTALL A COMPLETE AND OPERABLE SYSTEM BASED ON THE OWNERS CRITERIA INCLUDING, BUT NOT LIMITED TO THE FOLLOWING.
    A. CONDUIT
    B. WIRING
    C. PANELS
    D. TRANSFORMERS
    E. SWITCHES
    F. RECEPTACLES
    G. COMMUNICATION
    H. EXIT SIGNS
    I. SMOKE DETECTORS
    J. LIGHT FIXTURES
18. LOCATIONS OF UNDERGROUND UTILITIES SHOWN ON THIS PLAN ARE APPROXIMATE. ADDITIONAL UNDERGROUND UTILITIES MAY EXIST ON THIS SITE WHICH ARE NOT SHOWN ON THIS PLAN. CONTRACTOR SHALL BE RESPONSIBLE TO LOCATE AND PROTECT ALL UTILITIES ON SITE, WHETHER SHOWN ON THIS PLAN OR NOT.
19. THE CONTRACTOR SHALL OBTAIN ALL PERMITS AND SURVEY AS PART OF THIS WORK.
20. CONTRACTOR SHALL PROVIDE ALL SIGNS, FENCING, LIGHTS, BARRICADES, ETC. NECESSARY TO PROVIDE FOR PUBLIC SAFETY DURING CONSTRUCTION.
21. EARTHWORK CONTRACTORS SHALL COMPLY AND BE RESPONSIBLE FOR BERMING AND FILTERING OF PROPERTY LINES WHERE EROSION COULD OCCUR, MINIMIZATION OF TRACKING OF MATERIALS OFF-SITE, SWEEPING AND CLEANING OF ADJACENT STREETS AS NECESSARY, AND OBTAINING SOIL EROSION CONTROL PERMITS.
22. REQUEST FOR CONSTRUCTION STAKING SHALL BE DIRECTED TO THE ENGINEER A MINIMUM OF 48 HOURS PRIOR TO THEIR ACTUAL NEED.
23. IT SHALL BE THE RESPONSIBILITY OF THE CONTRACTOR TO COORDINATE WITH ALL UTILITY COMPANIES FOR THE PROTECTION AND/OR RELOCATION OF EXISTING UTILITIES.
24. ALL CONSTRUCTION SHALL BE SUBJECT TO CONSTRUCTION INSPECTION BY OWNER OR THEIR REPRESENTATIVE.
25. ALL MATERIALS PLACED DURING CONSTRUCTION SHALL BE IN NEW CONDITION, SHALL BE FREE FROM DEFECTS AND SHALL BE SUBJECT TO INSPECTION AND APPROVAL BY THE OWNER OR THEIR REPRESENTATIVE.
26. THE CONTRACTOR SHALL CONNECT THE ROOF DRAINS TO THE ON SITE STORM SEWER SYSTEM.

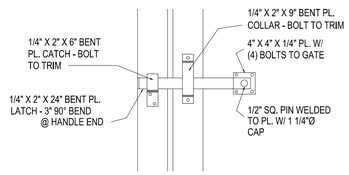

LATCH DETAIL

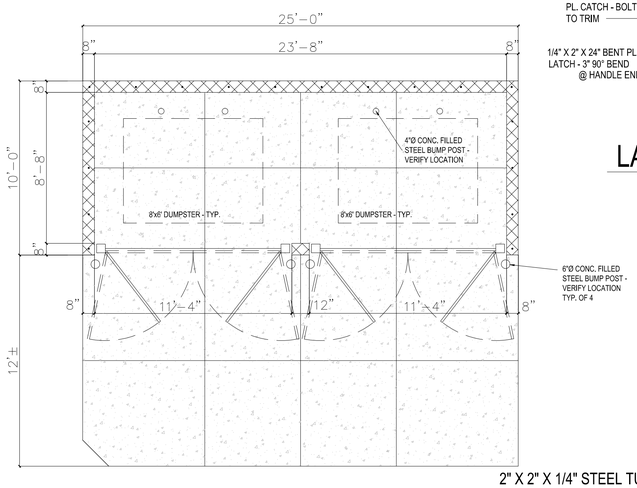

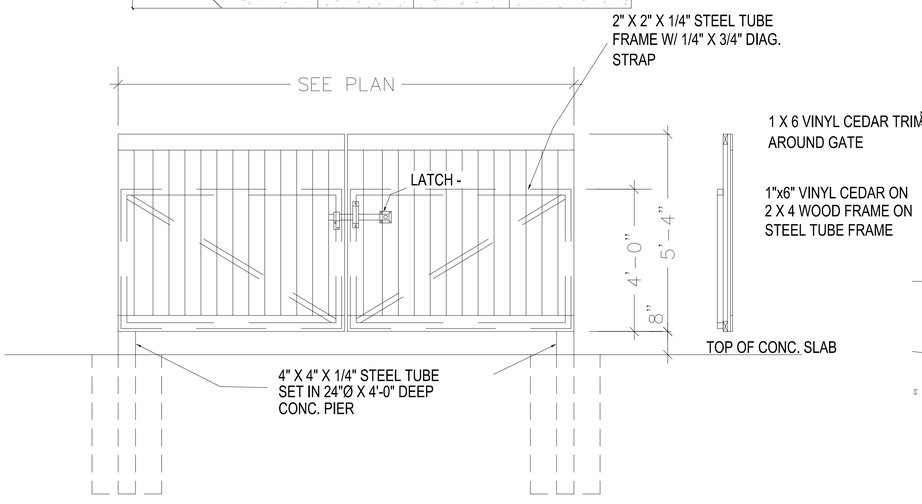

2 / C1.0 DUMPSTER DETAILS
SCALE: NO SCALE

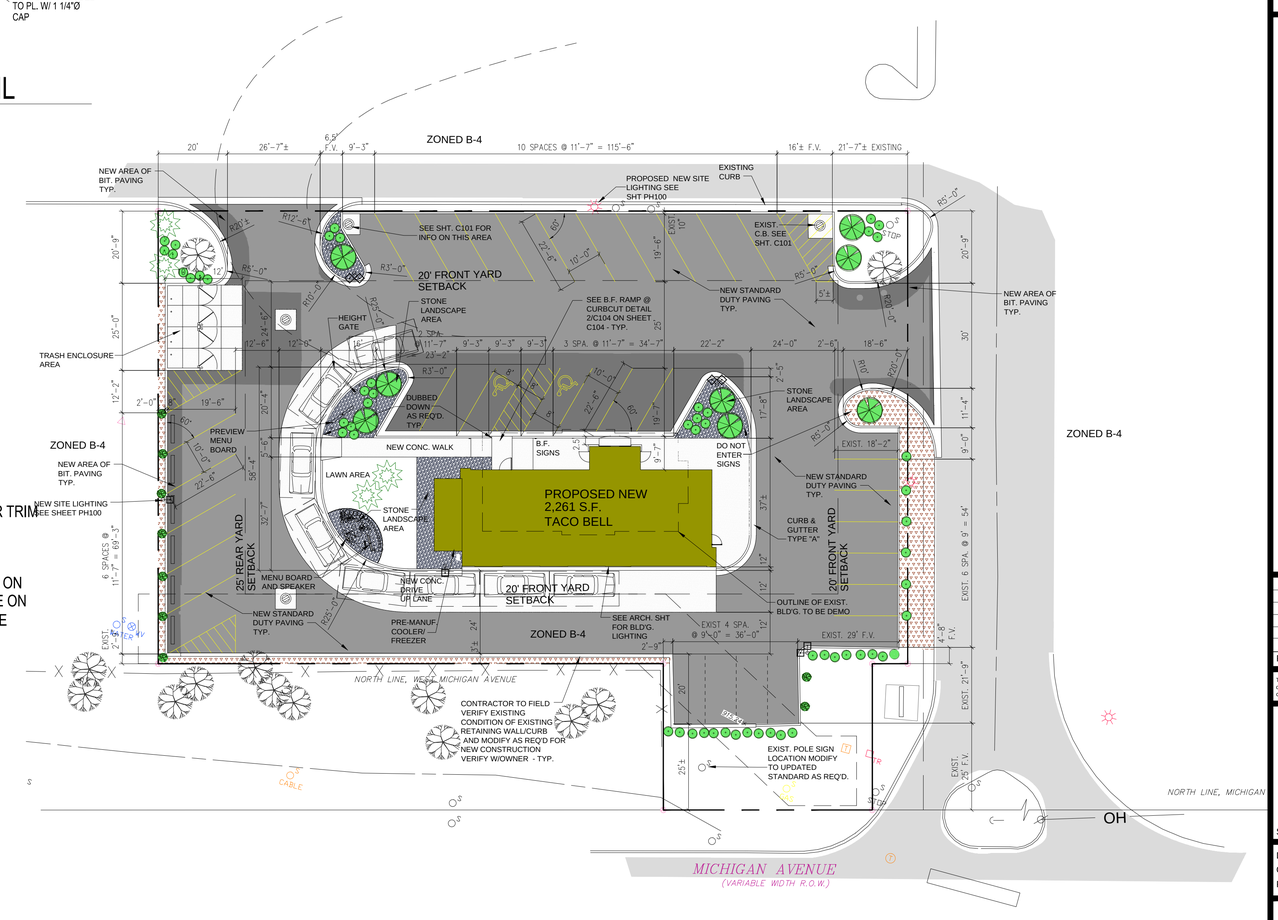

1 / C1.0 SITE PLAN
SCALE: 1" = 20'-0"

RETAIL DESIGN CONSULTANTS
7580 48TH ST. SE.
GRAND RAPIDS MI 49512
T.616.634.2253
GLENN@RDC-LLC.COM

JAMES VANDEN BERGE
CIVIL & ARCHITECTURAL CONSULTATION & DESIGN SERVICES
2065 FOXRIDGE
GRAND RAPIDS, MI 49505
PHONE: 616-443-2524
JVB LLC
EMAIL : JVBCIVILARCH@COMCAST.NET

TACO BELL

TACO BELL #5047
CHICAGO DIVERSIFIED FOODS CORP.
15955 W MICHIGAN AVE
CITY OF MARSHALL, CALHOUN COUNTY, MICHIGAN

PRELIM.	1/19/15

This drawing is the sole property of JVB LLC and is a copyrighted document and is not to be used or reproduced without their written consent. ©
© Unpublished work 2008

SEAL

DRAWN BY	JVB
CHECKED BY	JVB
PROJECT NUMBER	014028

C1.0

2 A4.0 ENTRY EXTERIOR ELEVATION
SCALE: NO SCALE

1 A4.0 FRONT EXTERIOR ELEVATION
SCALE: NO SCALE

4 A4.0 DRIVE THRU EXTERIOR ELEVATION
SCALE: NO SCALE

3 A4.0 REAR EXTERIOR ELEVATION
SCALE: NO SCALE

RDC
RETAIL DESIGN CONSULTANTS
7580 48TH ST. SE.
GRAND RAPIDS MI 49512
T.616.634.2253
GLENN@RDC-LLC.COM

JVB LLC
JAMES VANDEN BERGE
CIVIL & ARCHITECTURAL
CONSULTATION & DESIGN
SERVICES
2065 FOXRIDGE
GRAND RAPIDS, MI 49505
PHONE: 616-443-2524
EMAIL : JVBCIVILARCH@COMCAST.NET

TACO BELL

TACO BELL #5047
CHICAGO DIVERSIFIED
FOODS CORP.
15955 W MICHIGAN AVE
CITY OF MARSHALL, CALHOUN COUNTY, MICHIGAN

PRELIM. 1/19/15

This drawing is the sole property of JVB LLC and is a copyrighted document and is not to be used or reproduced without their written consent. © Unpublished work 2008

STATE OF MICHIGAN
GLENN RICHARD RAHN
ARCHITECT
No. 57678
LICENSED ARCHITECT
SEAL

DRAWN BY	JVB
CHECKED BY	JVB
PROJECT NUMBER	014028

R1.0

Calculation Summary					
Label	Avg	Max	Min	Avg/Min	Max/Min
EXTENDED	5.50	26.8	0.1	55.00	268.00
DRIVE-THRU LANE SURFACE	12.14	26.8	7.6	1.60	3.53
PARKING LOT SURFACE	10.05	19.9	3.6	2.79	5.53

LIGHT LEVELS ARE MAINTAINED FOOT-CANDLES, INITIAL LEVELS ARE SLIGHTLY HIGHER

Luminaire Schedule							
Symbol	Qty	Label	Arrangement	Total Lamp Lumens	LLF	Lum. Watts	Description
	1	A	SINGLE	110000	0.720	1080	ACCU 95200-210 / 95200-425S
	1	B	SINGLE	110000	0.720	1080	ACCU 95200-FP10 / 95200-HSS / 95200-425S
	3	C	2 @ 90 DEGREES	110000	0.720	1080	(2) ACCU 95200-FP10 / 95200-425D90
	1	OCC	SINGLE	12500	0.700	185	ORDER CONFIRMATION CANOPY
	7	TB	SINGLE	1230	0.900	36	ACCU 05247-051-052 @ 9.17' A.F.G.

SITE FIXTURES ARE 1000W METAL HALIDE w/ SAG LENSES
FIXTURE B HAS A HOUSE SIDE SHIELD
POLES ARE 25'-0" FOR AN OVERALL FIXTURE MOUNTING HEIGHT OF 27'-6" A.F.G.

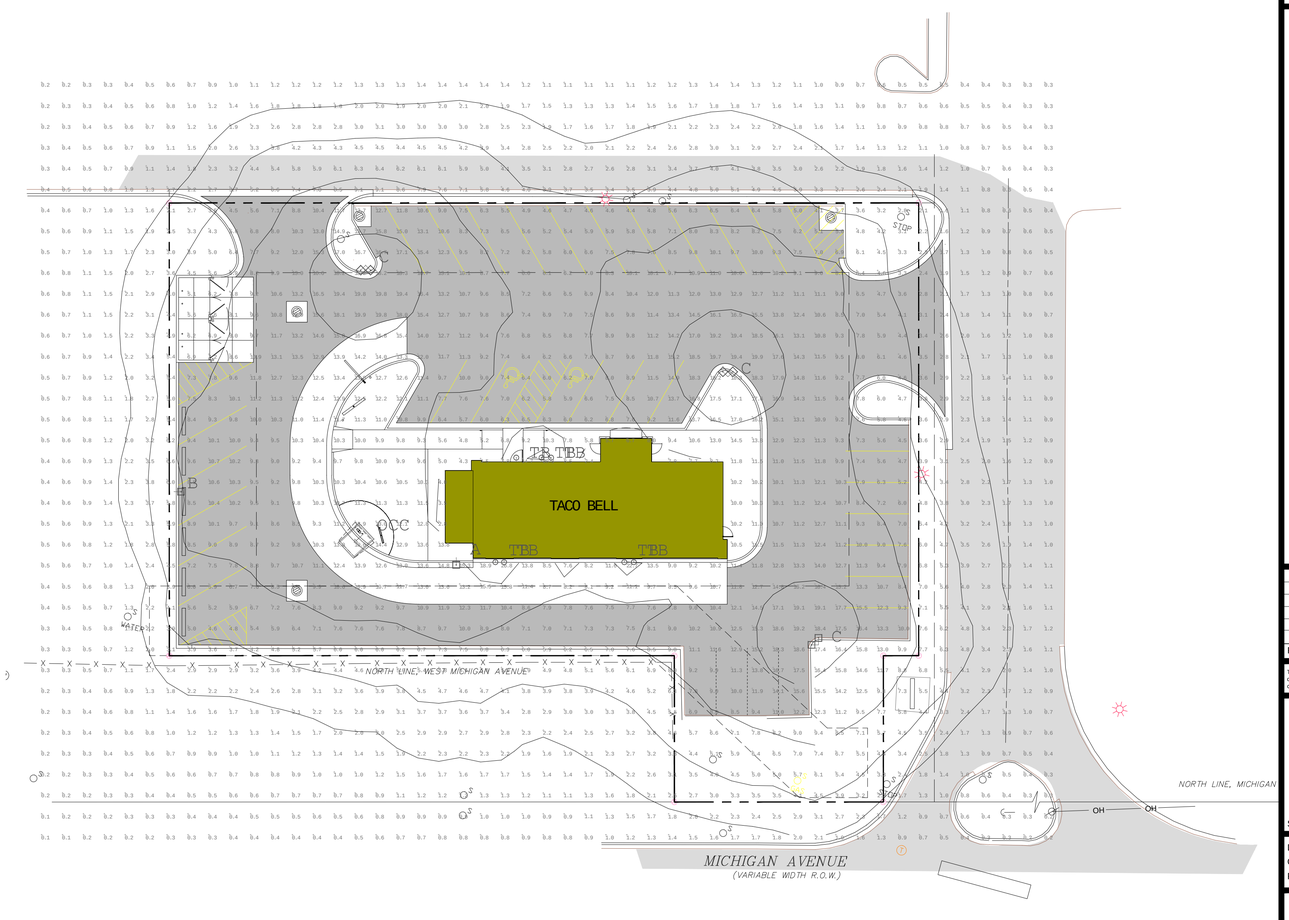

1
PHO.1
SITE PHOTOMETRIC PLANPLAN
SCALE: 1" = 20'-0"

RETAIL DESIGN CONSULTANTS
7580 48TH ST. SE.
GRAND RAPIDS MI 49512
T.616.634.2253
GLENN@RDC-LLC.COM

JAMES VANDEN BERGE
CIVIL & ARCHITECTURAL
CONSULTATION & DESIGN
SERVICES
2065 FOXRIDGE
GRAND RAPIDS, MI 49505
PHONE: 616-443-2524
JVB LLC
EMAIL : JVBCIVILARCH@COMCAST.NET

TACO BELL #5047
CHICAGO DIVERSIFIED FOODS CORP.
15955 W MICHIGAN AVE
CITY OF MARSHALL, CALHOUN COUNTY, MICHIGAN

PRELIM. 1/19/15

This drawing is the sole property of JVB LLC and is a copyrighted document and is not to be used or reproduced without their written consent. ©
© Unpublished work 2008

SEAL

DRAWN BY	JVB
CHECKED BY	JVB
PROJECT NUMBER	014028

PHO.1

CONTRACTOR SHALL PROVIDE SPECIFIED TREES AND OTHER PLANT MATERIALS THAT COMPLY WITH ALL RECOMMENDATIONS AND REQUIREMENTS OF ANSI 280.1 "AMERICAN STANDARD FOR NURSERY STOCK". PLANT MATERIAL SHALL BE HEALTHY, VIGOROUS STOCK, GROWN WITH GOOD HORTICULTURAL PRACTICE AND INSTALLED IN ACCORDANCE WITH METHODS ESTABLISHED BY THE AMERICAN ASSOCIATION OF NURSERYMEN.

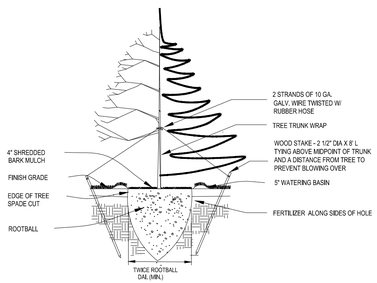

TREE SPADE PLANTING DETAIL

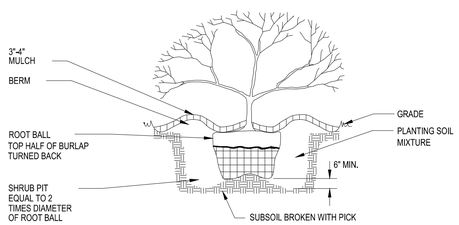

TYPICAL SHRUB PLANTING DETAIL

NOT TO SCALE

NOTES:

1. 1'-0" DIA. MIN. BARK MULCH BED AROUND ALL PLANTINGS (TYP.)
2. ALL LAWN AREA TO HAVE 4"-6" OF SANDY-LOAM TOPSOIL.
3. HYDRO-SEED. (ALL DISTURBED AREA)
   30%-ARGYLE KENTUCKY BLUEGRASS
   30%-98/85 KENTUCKY BLUEGRASS
   20%-THIRD GENERATION PERENNIAL RYEGRASS WITH ENDOPHYTE
   20%-IMPROVED VARIETY CREEPING RED FESCUE

   FERTILIZER.
   16-32-4 STARTER WITH SULPHUR, IRON MAGNESIUM QUICK RELEASE NITROGEN AND NO CHLORINE.

   MULCH:
   90% VIRGIN WOOD FIBER W/ ORGANIC TACKIFIER APPLICATION RATE OF 1,258 POUNDS PER ACRE.

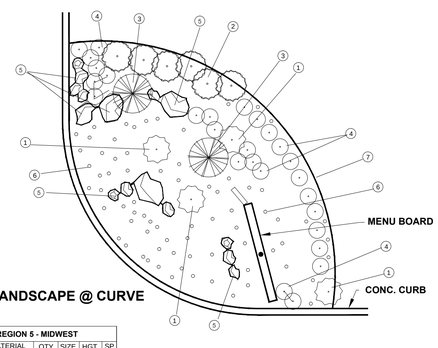

LANDSCAPE @ CURVE

REGION 5 - MIDWEST					
NO.	MATERIAL	QTY	SIZE	HGT.	SP
1	BLUE FESCUE FESTUCA GLAUCA	PER PLAN	3 GAL.	12"	12"
2	JAPANESE BARBERRY BERBERIS THUNBERGII	PER PLAN	3 GAL.	15"	15"
3	SOAPWEED YUCCA GLAUCA	PER PLAN	5 GAL.		
4	DWARF GOLDEN ARBORVITAE THUJA OCCIDENTALIS 'RHEINGOLD'	PER PLAN	5 GAL.	24"	24"
5	LIMESTONE BOULDER SAND -GRAY - 6" TO 24"	PER PLAN	6"-24"	N/A	
6	RIVER ROCK STONE VERIFY SIZE W/ OWNER	PER PLAN	3"	N/A	
7	STEEL EDGING	PER PLAN	N/A	3" AFG 8" BFG	N/A

MATERIALS LEGEND

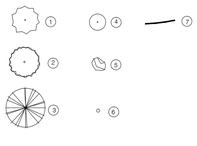

PLANT MATERIAL SCHEDULE

AMOUNT		COMMON NAME	LATIN NAME	SIZE
4	EVERGREEN	COLORADO SPRUCE	Picea pungens	5' HT.
1	UNDERSTORY	'Cherokee Princess' DOG WOOD	Cornus florida	2 1/2" Cal
3	SHRUB DEC.	DWARF BURNING BUSH	Euonymus alata 'Compacta'	18"-24"
20	SHRUB EVER.	VARIEGATED JAPENESE GARDEN JUNIPER	Juniperus chinensis 'Procumbens Variegata'	18"-24"
7	SHRUB DEC.	NORTHERN BAYBERY(golden)	Berberis thunbergii 'Aurea'	18"-24"
9	SHRUB DEC.	BLUE BIRD ROSE OF SHARON	Hibiscus Syriacus "Blue Bird"	18"-24"
AS REQ'D. PER PLAN		CARPET BUGLE	Ajuga reptans	VARIES
		TRAILING PERIWINKLE	Vinca minor	VARIES
		JAPANESE SILVER GRASS	Little Fountain & Little Zebra	VARIES
AS REQ'D. PER PLAN		HOSTA		VARIES
		HARDY GERANIUM		VARIES
		CREEPING MYTLE		VARIES

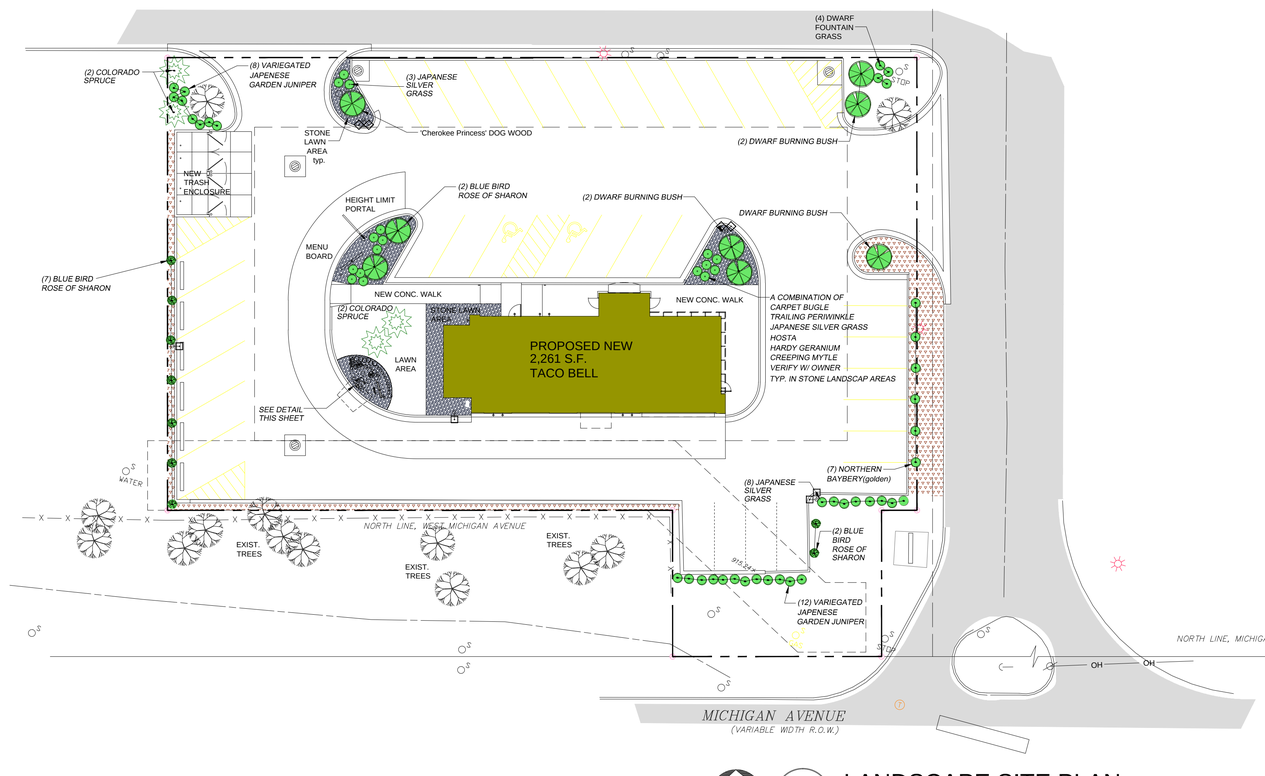

1 / L100 LANDSCAPE SITE PLAN

SCALE: 1" = 20'-0"

RDC
RETAIL DESIGN CONSULTANTS
7580 48TH ST. SE.
GRAND RAPIDS MI 49512
T.616.634.2253
GLENN@RDC-LLC.COM

JAMES VANDEN BERGE
CIVIL & ARCHITECTURAL CONSULTATION & DESIGN SERVICES
2065 FOXRIDGE
GRAND RAPIDS, MI 49505
PHONE: 616-443-2524
JVB LLC
EMAIL : JVBCIVILARCH@COMCAST.NET

TACO BELL

TACO BELL #5047
CHICAGO DIVERSIFIED FOODS CORP.
15955 W MICHIGAN AVE
CITY OF MARSHALL, CALHOUN COUNTY, MICHIGAN

PRELIM. 1/19/15

This drawing is the sole property of JVB LLC and is a copyrighted document and is not to be used or reproduced without their written consent. ©
© Unpublished work 2008

SEAL

DRAWN BY	JVB
CHECKED BY	JVB
PROJECT NUMBER	014028

L100

MICHIGAN DEPARTMENT OF MANAGEMENT AND BUDGET
S-E-S-C KEYING SYSTEM

KEY	BEST MANAGEMENT PRACTICES	SYMBOL	WHERE USED
SEDIMENT CONTROLS			
S51	SILT FENCE	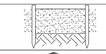	Use adjacent to critical areas, to prevent sediment laden sheet flow from entering these areas.
S58	INLET PROTECTION FABRIC DROP		Use at stormwater inlets, especially at construction sites.
S59	INLET PROTECTION FABRIC FENCE		Use at stormwater inlets, especially at construction sites.
E12	RIPRAP	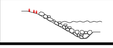	Use along shorelines, waterways, or where concentrated flows occur. Slows velocity, reduces sediment load, and reduces erosion.

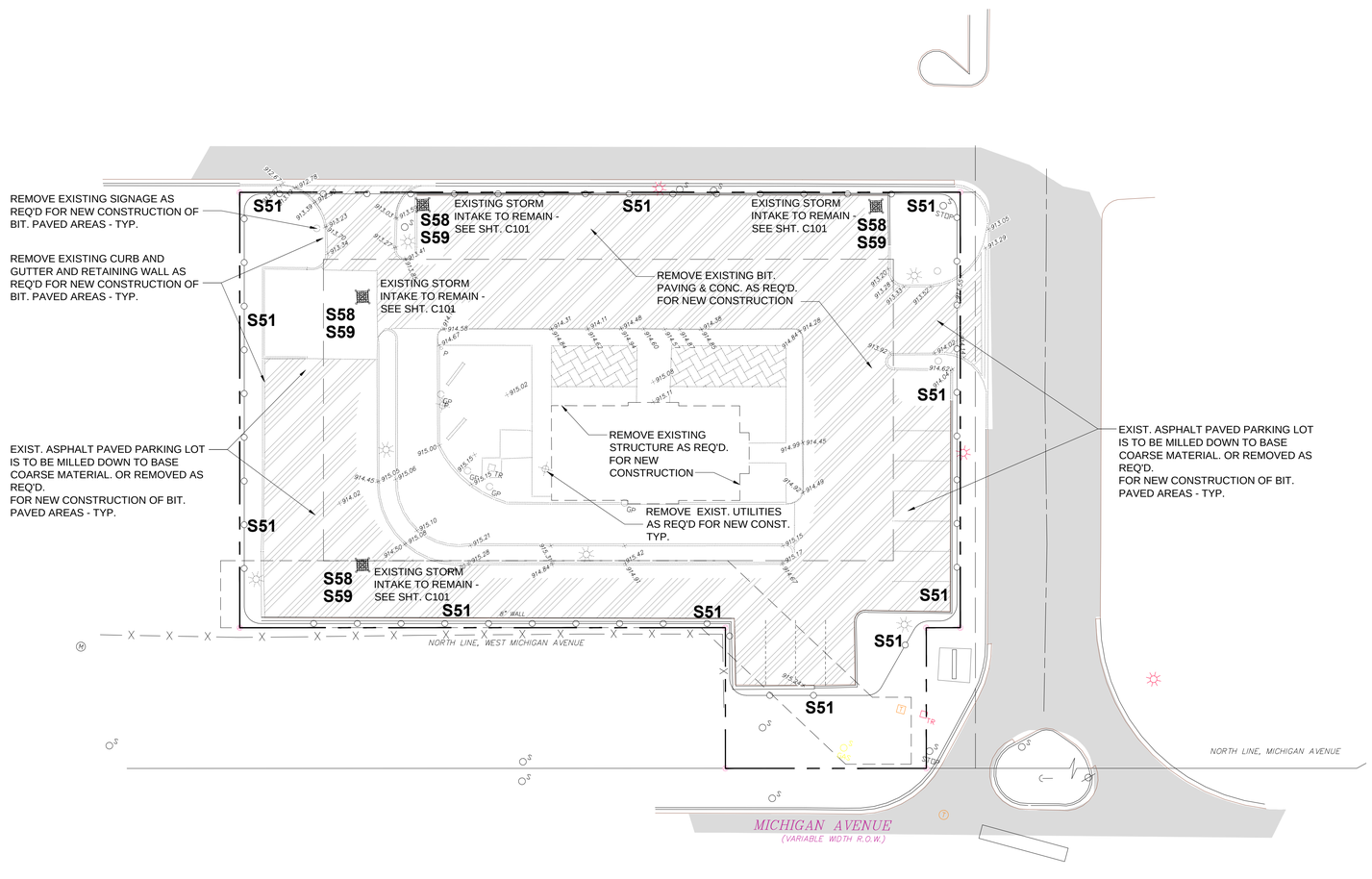

1 / D1.0 SITE DEMOLITION/SILTATION PLAN
SCALE: 1" = 20'-0"

RETAIL DESIGN CONSULTANTS
7580 48TH ST. SE.
GRAND RAPIDS MI 49512
T.616.634.2253
GLENN@RDC-LLC.COM

JAMES VANDEN BERGE
CIVIL & ARCHITECTURAL CONSULTATION & DESIGN SERVICES
2065 FOXRIDGE
GRAND RAPIDS, MI 49505
PHONE: 616-443-2524
EMAIL : JVBCIVILARCH@COMCAST.NET

TACO BELL #5047
CHICAGO DIVERSIFIED FOODS CORP.
15955 W MICHIGAN AVE
CITY OF MARSHALL, CALHOUN COUNTY, MICHIGAN

PRELIM. 1/19/15

This drawing is the sole property of JVB LLC and is a copyrighted document and is not to be used or reproduced without their written consent. © © Unpublished work 2008

SEAL

DRAWN BY	JVB
CHECKED BY	JVB
PROJECT NUMBER	014028

D1.0

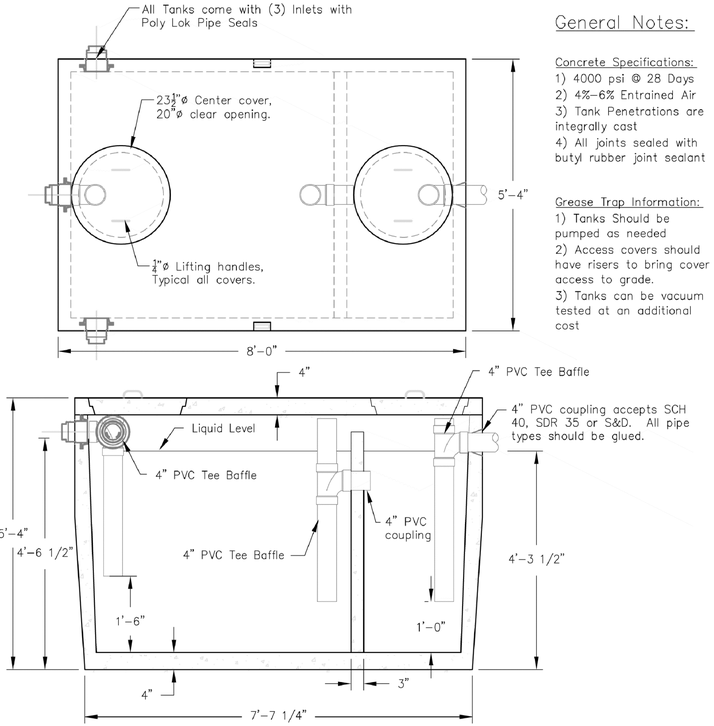

General Notes:

Concrete Specifications:
1) 4000 psi @ 28 Days
2) 4%-6% Entrained Air
3) Tank Penetrations are integrally cast
4) All joints sealed with butyl rubber joint sealant

Grease Trap Information:
1) Tanks Should be pumped as needed
2) Access covers should have risers to bring cover access to grade.
3) Tanks can be vacuum tested at an additional cost

1 C104 SIM. TO GREASE TRAP DETAIL
SCALE: NO SCALE

KEYED NOTES

1. TOPSOIL & SEED, OR PAVEMENT AS DETAILED ELSEWHERE.
2. CONTINUOUS METALLIC WARNING TAPE
3. CLEAN SELECT GRANULAR BACKFILL
4. 6" CLEAN SAND ENVELOPE
5. 4" PVC ELECTRICAL CONDUITS (SCHEDULE 40), QUANTITY AS REQUIRED
6. 4" PVC TELEPHONE CONDUIT (SCHEDULE 40), QUANTITY AS REQUIRED
7. MAINTAIN 2" MINIMUM SPACING BETWEEN CONDUITS.

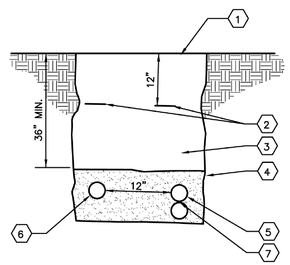

ECTRICAL & COMMUNICATIONS SERVICE TRENCH

N.T.S.

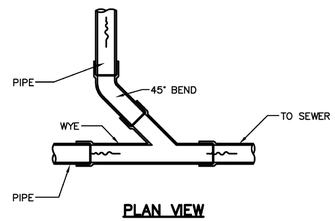

PLAN VIEW

WYE CONNECTION

N.T.S.

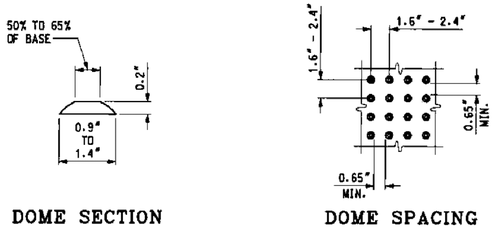

DOME SECTION

DOME SPACING

* MAXIMUM LANDING SLOPE IN ANY DIRECTION IS 2.0%. MINIMUM LANDING DIMENSIONS 5' x 5'.

** MAXIMUM CROSS SLOPE ON RAMP IS THE SAME AS THAT FOR SIDEWALK (2.0%). RUNNING SLOPE 5% - 7% (8.3% MAXIMUM).

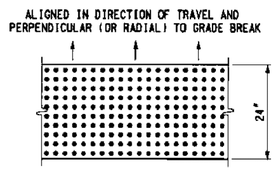

DOME ALIGNMENT

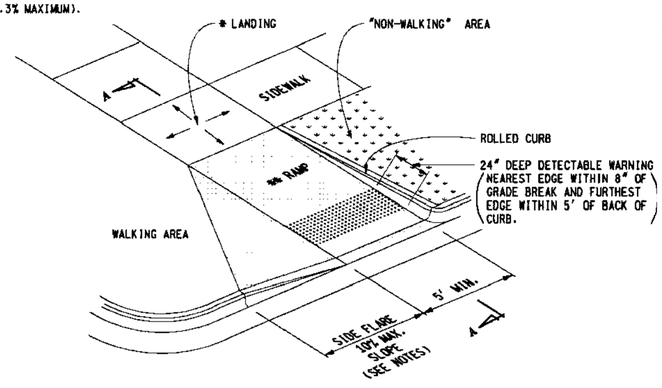

2 C104 B.F. RAMP DETAIL @ CURB CUTS
SCALE: NO SCALE

KEYED NOTES

1. EXCAVATE WIDTH OF TRENCH AS NEEDED
2. PLACE SUITABLE SOIL OR GRANULAR BACKFILL IN 6" MAX. LIFTS. SUITABLE SOIL SHALL BE COMPACTED TO 90% MIN. (98% MIN. UNDER PAVEMENT) DRY DENSITY, PER ASTM D698, GRANULAR BACKFILL SHALL BE COMPACTED TO 75% (80% UNDER PAVEMENT) RELATIVE DENSITY, PER ASTM 4353. GRANULAR BACKFILL REQUIRED UNDER PAVEMENT.
3. PROPOSED STORM OR SANITARY SEWER
4. TOPSOIL, SEED, AND MULCHING OR PAVEMENT AS DETAILED ELSEWHERE.
5. NO. 57 OR NO. 67 AGGREGATE PLACED A MINIMUM OF 12" ABOVE THE TOP OF THE PIPE
6. NO. 57 OR NO. 67 AGGREGATE PLACED A MINIMUM OF 6" BELOW THE BOTTOM OF THE PIPE

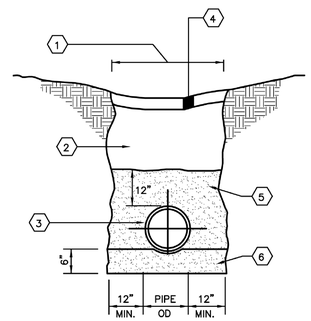

SEWER TRENCH

N.T.S.

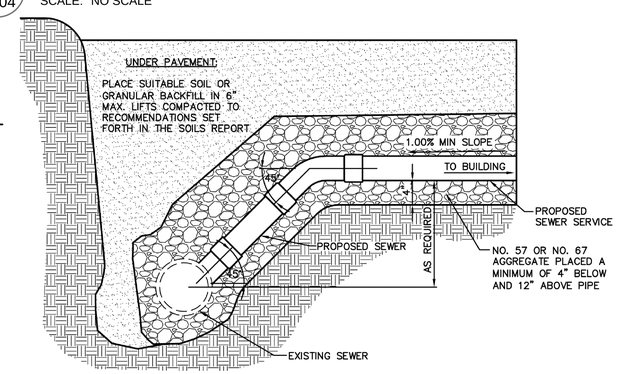

SEWER RISER (TAP)

N.T.S.

KEYED NOTES

1. CONCRETE, MATCH PAVEMENT SPEC.
2. 6" (MIN.) AGGREGATE BASE
3. 6" DIA. CLEAN-OUT PIPE
4. CAP AND SEAL CONDUIT
5. THREADED CLEAN-OUT CAP
6. CAST-IRON MONUMENT BOX, EJIW 1570 OR APPROVED EQUAL.
7. 45° BEND
8. WYE
9. SEWER

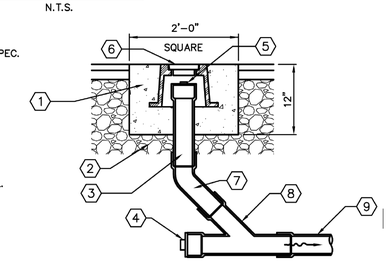

CLEAN OUT (PAVEMENT AREA)

N.T.S.

KEYED NOTES

1. CONCRETE, MATCH PAVEMENT SPEC.
2. 6" (MIN.) AGGREGATE BASE
3. 6" DIA. CLEAN-OUT PIPE
4. CAP AND SEAL CONDUIT
5. THREADED CLEAN-OUT CAP
6. 45° BEND
7. WYE
8. SEWER

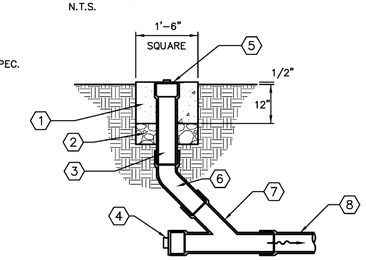

CLEAN OUT (LAWN AREA)

N.T.S.

RETAIL DESIGN CONSULTANTS
7580 48TH ST. SE.
GRAND RAPIDS MI 49512
T.616.634.2253
GLENN@RDC-LLC.COM

JAMES VANDEN BERGE
CIVIL & ARCHITECTURAL CONSULTATION & DESIGN SERVICES
2065 FOXRIDGE
GRAND RAPIDS, MI 49505
PHONE: 616-443-2524
EMAIL : JVBCIVILARCH@COMCAST.NET
JVB LLC

TACO BELL

TACO BELL #5047
CHICAGO DIVERSIFIED FOODS CORP.
15955 W MICHIGAN AVE
CITY OF MARSHALL, CALHOUN COUNTY, MICHIGAN

PRELIM. 1/19/15

This drawing is the sole property of JVB LLC and is a copyrighted document and is not to be used or reproduced without their written consent. © © Unpublished work 2008

SEAL

DRAWN BY	JVB
CHECKED BY	JVB
PROJECT NUMBER	014028

C104

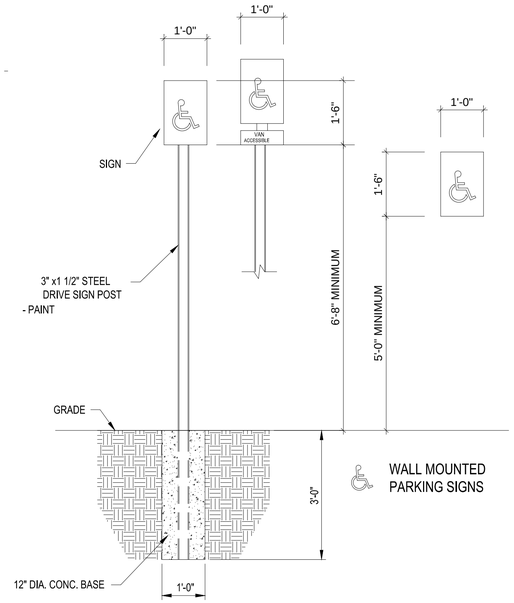

TYPICAL B.F. SIGN POST DETAIL

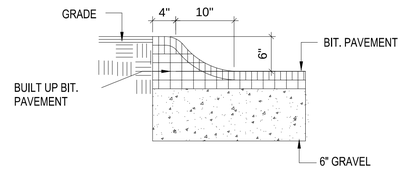

TYPICAL ASPHALT ROLLED CURB DETAIL

NO SCALE

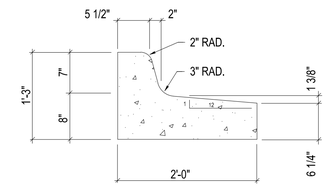

TYPE "A"
24" CURB AND GUTTER

2 C103 DETAIL
SCALE: 1" = 1'-0"

1 C103 NOT USED
SCALE: 1" = 1'-0"

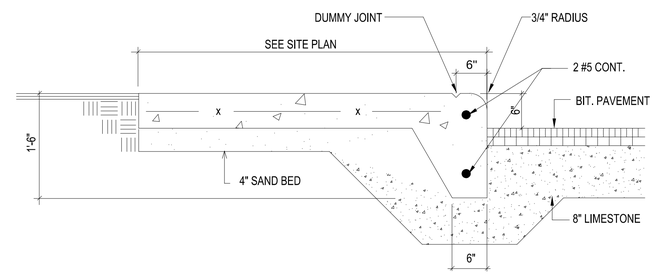

TYPICAL CURB WALK DETAIL

4 C103 DETAIL
SCALE: 1" = 1'-0"

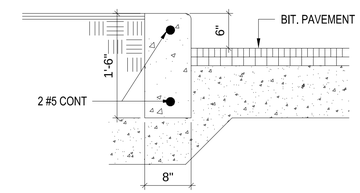

TYPICAL CURB DETAIL

3 C103 DETAIL
SCALE: 1" = 1'-0"

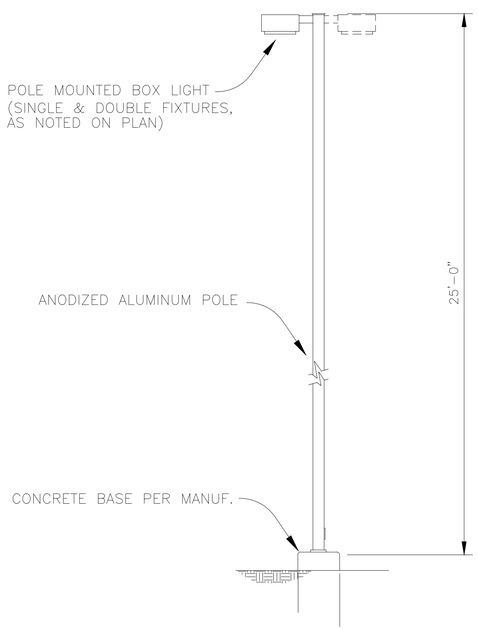

PARKING LOT LIGHT DETAIL

NO SCALE

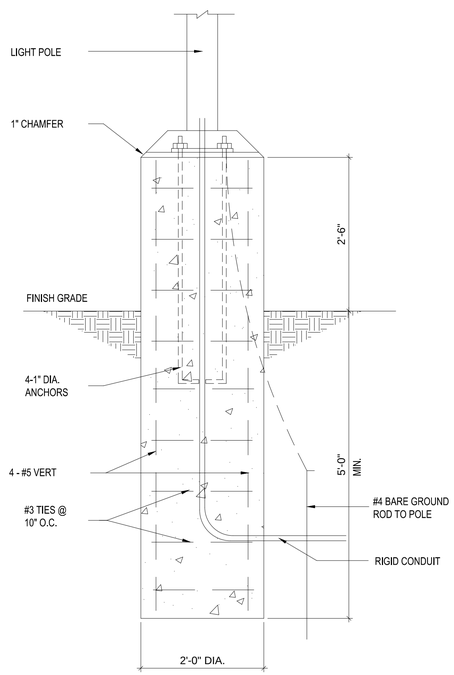

TYPICAL LIGHT POLE BASE DETAIL

NTS

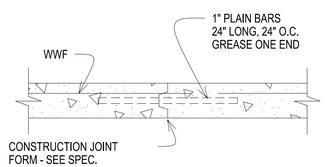

TYPICAL CONSTRUCTION JOINT DETAIL

7 C103 DETAIL
SCALE: NO SCALE

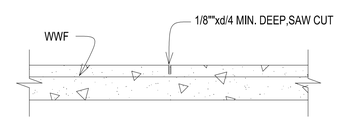

TYPICAL CONTROL JOINT DETAIL

6 C103 DETAIL
SCALE: NO SCALE

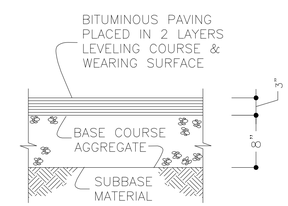

TYPICAL STANDARD DUTY PAVING SECTION

5 C103 DETAIL
SCALE: NO SCALE

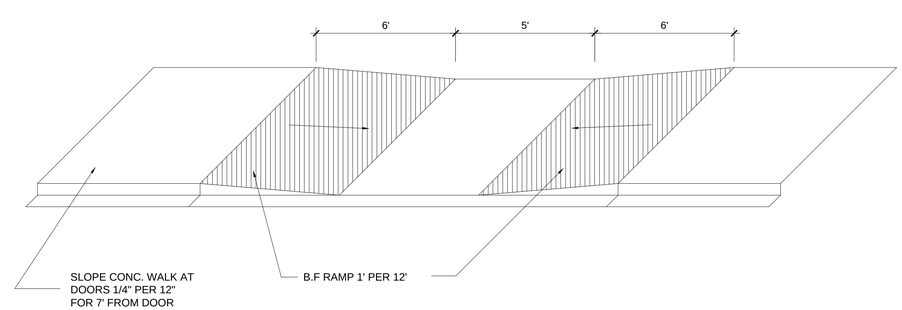

BARRIER FREE RAMP DETAIL

7 C103 DETAIL
SCALE: NO SCALE

RETAIL DESIGN CONSULTANTS
7580 48TH ST. SE.
GRAND RAPIDS MI 49512
T.616.634.2253
GLENN@RDC-LLC.COM

JAMES VANDEN BERGE
CIVIL & ARCHITECTURAL CONSULTATION & DESIGN SERVICES
2065 FOXRIDGE
GRAND RAPIDS, MI 49505
PHONE: 616-443-2524
EMAIL : JVBCIVILARCH@COMCAST.NET

TACO BELL #5047
CHICAGO DIVERSIFIED FOODS CORP.
15955 W MICHIGAN AVE
CITY OF MARSHALL, CALHOUN COUNTY, MICHIGAN

PRELIM. 1/19/15

This drawing is the sole property of JVB LLC and is a copyrighted document and is not to be used or reproduced without their written consent. © © Unpublished work 2008

SEAL

DRAWN BY	JVB
CHECKED BY	JVB
PROJECT NUMBER	014028

C103

Xref C:\Jims Folder\2011\11023 TACO BELL BATTLE CREEK\11023mBDR.dwg

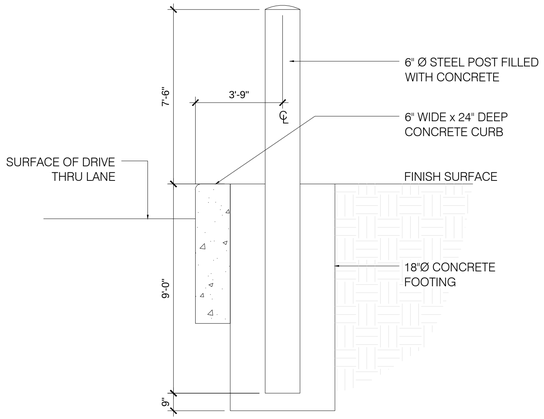

6 / C102 DETAIL
SCALE: NO SCALE

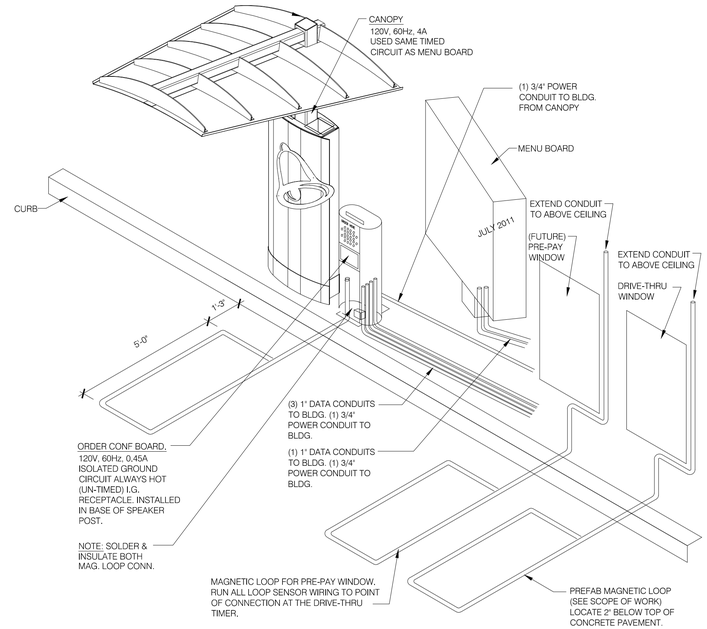

5 / C102 DRIVE UP SPEAKER DETAIL
SCALE: NO SCALE

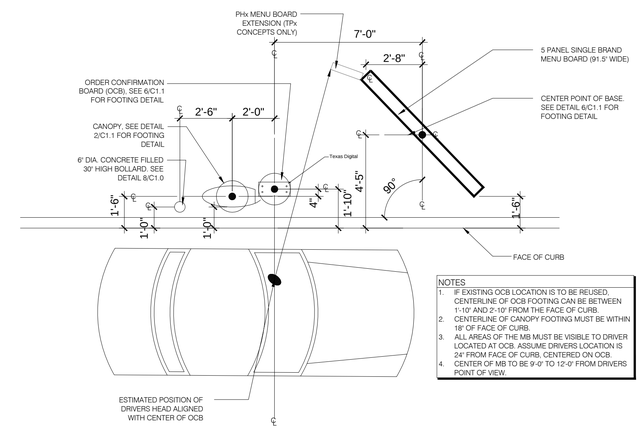

NOTES
1. IF EXISTING OCB LOCATION IS TO BE REUSED, CENTERLINE OF OCB FOOTING CAN BE BETWEEN 1'-10" AND 2'-10" FROM THE FACE OF CURB.
2. CENTERLINE OF CANOPY FOOTING MUST BE WITHIN 18" OF FACE OF CURB.
3. ALL AREAS OF THE MB MUST BE VISIBLE TO DRIVER LOCATED AT OCB. ASSUME DRIVERS LOCATION IS 24" FROM FACE OF CURB, CENTERED ON OCB.
4. CENTER OF MB TO BE 9'-0" TO 12'-0" FROM DRIVERS POINT OF VIEW.

1 / C102 DRIVE UP SPEAKER DETAIL
SCALE: NO SCALE

NOTE:
BOLT PATTERN PROVIDED AS EXAMPLE
- OBTAIN ANCHOR BOLT TEMPLATE FROM SUPPLIER

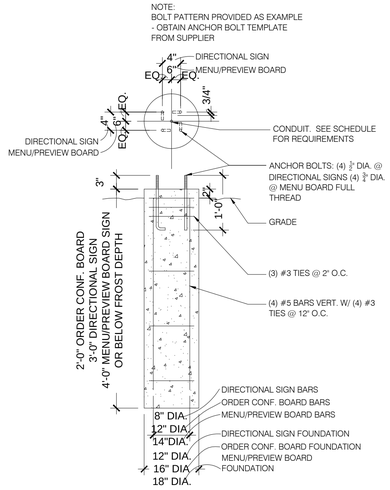

4 / C102 DETAIL
SCALE: NO SCALE

CONDUIT SCHEDULE

DEVICE	POWER	DATA
DIRECTIONAL	(1) 3/4"	-
OCB	(1) 3/4"	(3) 1"
MENU BOARD	(1) 3/4"	(1) 1"

NOTE:
ALL CONDUIT TO BE MIN. 12" BELOW GRADE OT LOCAL FROST DEPTH AND PROJECT 3" ABOVE FOUNDATION

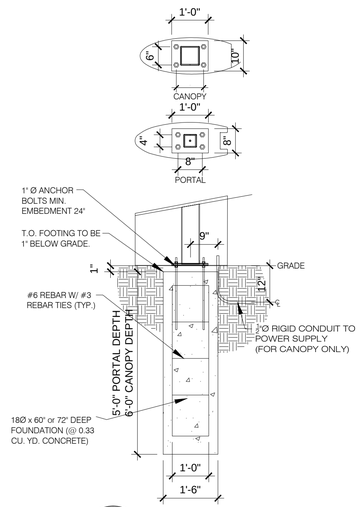

3 / C102 DETAIL
SCALE: NO SCALE

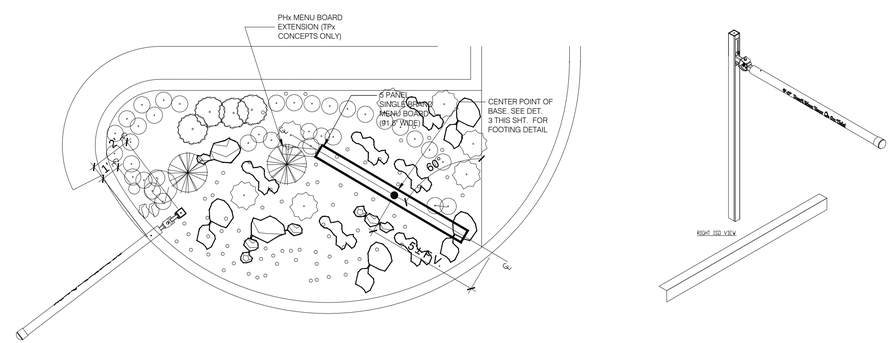

2 / C102 DRIVE UP HEIGHT RESTRICTION DETAIL
SCALE: NO SCALE

RETAIL DESIGN CONSULTANTS
7580 48TH ST. SE.
GRAND RAPIDS MI 49512
T.616.634.2253
GLENN@RDC-LLC.COM

JAMES VANDEN BERGE
CIVIL & ARCHITECTURAL CONSULTATION & DESIGN SERVICES
2065 FOXRIDGE
GRAND RAPIDS, MI 49505
PHONE: 616-443-2524
JVB LLC
EMAIL : JVBCIVILARCH@COMCAST.NET

TACO BELL

TACO BELL #5047
CHICAGO DIVERSIFIED FOODS CORP.
15955 W MICHIGAN AVE
CITY OF MARSHALL, CALHOUN COUNTY, MICHIGAN

PRELIM. 1/19/15

This drawing is the sole property of JVB LLC and is a copyrighted document and is not to be used or reproduced without their written consent. © © Unpublished work 2008

SEAL

DRAWN BY	JVB
CHECKED BY	JVB
PROJECT NUMBER	014028

C102

Xref C:\Jims Folder\2011\11023 TACO BELL BATTLE CREEK\11023mBDR.dwg

EXISTING STORM STRUCTURES

Catch Basin #528
Rim Elev. = 912.82
12" RCP(W) = 910.22

Catch Basin #732
Rim Elev. = 912.61
12" RCP(E) = 910.01
12" RCP(SW) = 910.01

Catch Basin #690
Rim Elev. = 912.86
12" RCP(NE) = 909.96
12" RCP(S) = 909.96

Catch Basin #820
Rim Elev. = 913.87
12" RCP(N) = 909.92
12" RCP(W) = 909.87

Storm Manhole #823
Rim Elev. = 913.42
18" CPP(N) = 905.22
18" CPP(S) = 905.22
12" RCP(E) = 908.22

ALL STORM C.B., PIPING ETC. IS EXISTING ON SITE CONTRACTOR TO FIELD VERIFY EXISTING CONDITION OF EXISTING STORM AND REUSE AS REQ'D. FOR NEW CONSTRUCTION NEW GRADING IS SHOWN AS REQ'D. FOR USE OF EXISTING STORM SYSTEM FOR NEW CONSTRUCTION

BENCHMARK #675
ELEVATION = 916.18(NAVD88)

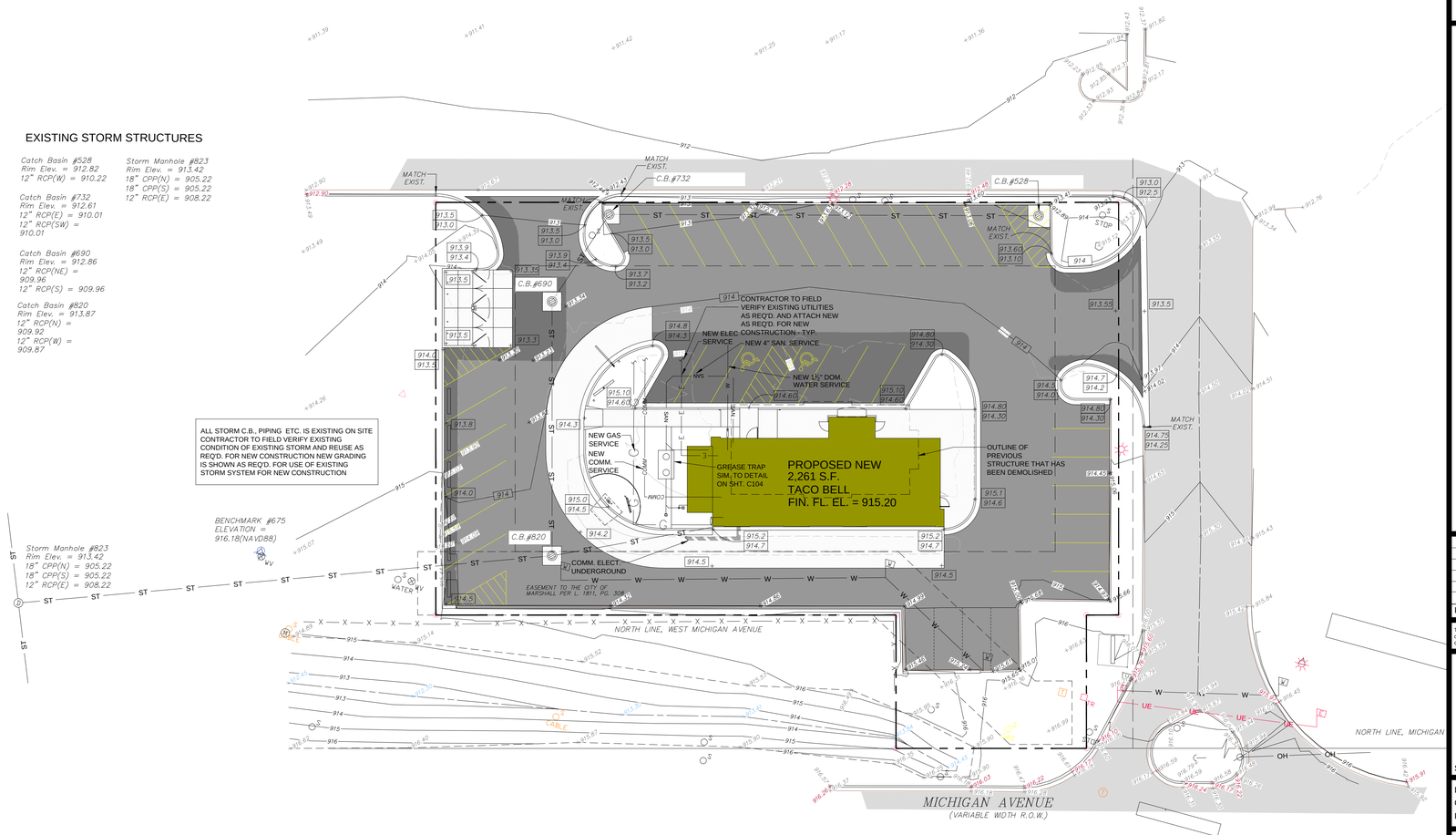

1 C2.0 UTILITY SITE PLAN
SCALE: 1" = 20'-0"

RETAIL DESIGN CONSULTANTS
7580 48TH ST. SE.
GRAND RAPIDS MI 49512
T.616.634.2253
GLENN@RDC-LLC.COM

JAMES VANDEN BERGE
CIVIL & ARCHITECTURAL CONSULTATION & DESIGN SERVICES
2065 FOXRIDGE
GRAND RAPIDS, MI 49505
PHONE: 616-443-2524
EMAIL : JVBCIVILARCH@COMCAST.NET

TACO BELL #5047
CHICAGO DIVERSIFIED FOODS CORP.
15955 W MICHIGAN AVE
CITY OF MARSHALL, CALHOUN COUNTY, MICHIGAN

PRELIM. 1/19/15

This drawing is the sole property of JVB LLC and is a copyrighted document and is not to be used or reproduced without their written consent. © © Unpublished work 2008

SEAL

DRAWN BY	JVB
CHECKED BY	JVB
PROJECT NUMBER	014028

C2.0

City of Marshall

323 West Michigan Avenue - Marshall, MI 49068-1578
Phone (269) 781-5183 - FAX (269) 781-3835

Dear Property Owner:

The City of Marshall Zoning Board of Appeals will hold a public hearing on Thursday – March 19, 2014, at 7:00 p.m. IN THE COUNCIL CHAMBERS OF TOWN HALL located at 323 West Michigan Avenue, Marshall, MI 49068, to hear public comments on Dimensional Variances for **APPEAL #15.01 -** filed by Chicago Diversified Foods (Taco Bell), 15955 W Michigan Avenue, from:

(a) §156.324 MINIMUM NUMBER OF SPACES REQUIRED – increase allowed parking by 5 spaces
(b) §156.323 GENERAL REGULATIONS – lessen parking lot setbacks
(c) §156.328 LOADING SPACE REQUIREMENTS, §156.323 GENERAL REGULATIONS – lessen loading space requirements
(d) §156.304 METHODS OF SCREENING, §156.306 INTERIOR LANDSCAPING, §156.307 PARKING LOT LANDSCAPING – minimize landscaping requirements

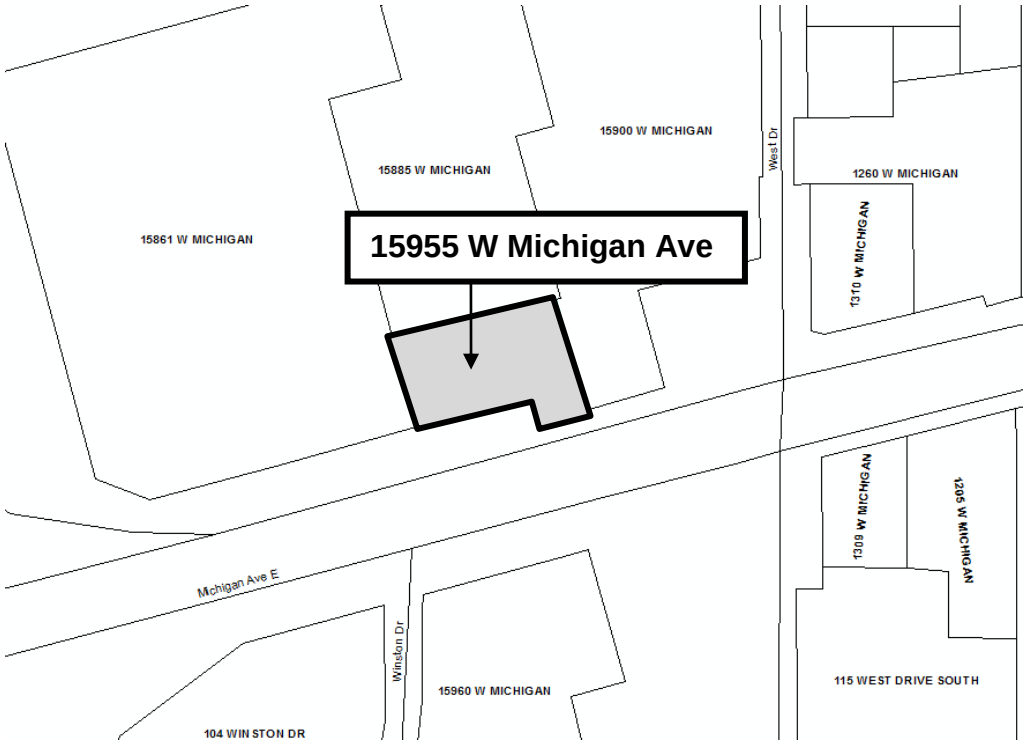

The Zoning Board of Appeals under certain circumstances may grant a variance to the Zoning Regulations upon presentation of sufficient evidence to support the variance request.

Any property owner, their representative, or any interested person is invited to attend the meeting to be held as noticed above. Written response can be sent to or hand delivered to the attention of the Zoning Board of Appeals, 323 W. Michigan Ave., Marshall, Michigan 49068. Please direct any questions to Natalie Dean (269) 781-3985 ext 1505.

Anyone who requires an auxiliary aid or service for effective communication, or a modification of policies or procedures to participate in a City program, service, or activity should contact Natalie Dean at the Public Services Building, 900 S. Marshall Ave. by calling (269) 781-3985 x1505 or emailing ndean@cityofmarshall.com 3 days prior the scheduled meeting or event.

OWNER/OCCUPANT
15885 W MICHIGAN
MARSHALL MI 49068

OWNER/OCCUPANT
15861 W MICHIGAN
MARSHALL MI 49069

OWNER/OCCUPANT
15955 W MICHIGAN
MARSHALL MI 49070

OWNER/OCCUPANT
15900 W MICHIGAN
MARSHALL MI 49071

OWNER/OCCUPANT
104 WINSTON DR
MARSHALL MI 49072

OWNER/OCCUPANT
15960 W MICHIGAN
MARSHALL MI 49073